JVC

SERVICE MANUAL

MODEL

KD-85A/B/C/E/J/U

STEREO CASSETTE DECK

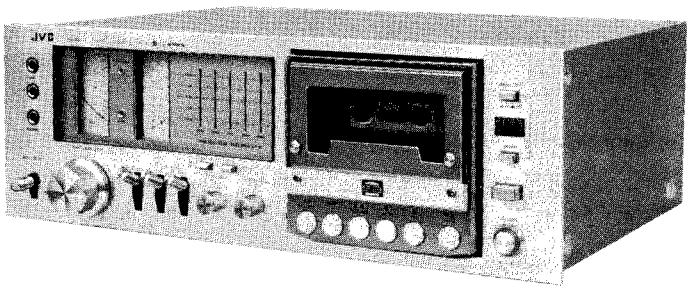

No. 4165
February 1978

Contents

Specifications 2
Features 3
Controls and Connections 3
Main Parts Location 4
Information Regarding New Technical Developments. . 6
Removal of the Main Parts 10
Main Adjustment 12
Wiring Connection (Amplifier Circuit) 19
" " (Mecha. Control Circuit) 20
Standard Schematic Diagram (Amplifier Circuit) 21
" " " (Mecha. Control Circuit) . 22
Maintenance 23
Printed Wiring Board Parts
Main Amplifier 24
Spectro-peak Level 28
Control 30
Power Supply 33
Super ANRS 34
Other P.W. Board 36
Mechanical Component Parts List 38
Mechanical Component Parts 41
Enclosure Assembly and Electrical Parts 42
Enclosure Assembly and Electrical Parts List 43
Packing, Packing Material Parts List 47
Accessories 48

Specifications

Type	:	Stereo cassette deck
Track system	:	4-track, 2-channel
Cassettes	:	C-30, C-60, C-90
Frequency response		
Chrome *1	:	20–18,000 Hz (Nominal) 30–16,000 Hz (Typical)
SF *2	:	20–17,000 Hz (Nominal) 30–16,000 Hz (Typical)
Surpasses DIN 45 500		
*1 ..... TDK-SA or Equivalent		
*2 ..... MAXELL-UD or Equivalent		
Signal-to-Noise ratio	:	56 dB (from peak level, weighted) The S/N is improved by 5 dB at 1 kHz and by 10 dB above 5 kHz with ANRS on.
Effect of Super ANRS (normal tape)		
Improvement of S/N	:	the same as with ANRS
Improvement of frequency response	:	0 VU recording; 6 dB at 10 kHz +5 VU recording; 12 dB at 10 kHz
Improvement of distortion	:	0 VU recording; 3% less at 10 kHz
Wow and flutter	:	0.05% (WRMS) 0.18% (DIN 45 500)
Crosstalk	:	65 dB
Harmonic distortion	:	1.2%
Bias	:	AC bias (95 kHz)
Erasure	:	AC erasure (95 kHz)
Heads	:	Recording/playback; Sen-Alloy head Erasure; Double gap, Ferrite head
Motors	:	FG servo DC motor x 1 DC motor x 1
Tape speed	:	4.8 cm/sec.
Recording time	:	2 x 30 minutes with C-60 cassette
Fast forward time	:	85 sec. with C-60 cassette
Rewind time	:	85 sec. with C-60 cassette Playback equalizer time constant; Normal/SF 3180 μs/120 μ SA/CrO_2 & Fe-Cr 3180 μs/70 μs
Semiconductors	:	18 ICs, 65 transistors, 94 diodes (including 30 LEDs), 5 zener diodes and 1 hall element
Input terminals	:	MIC jack x 2 Max. sensitivity; 0.2 mV Matching impedance; 600Ω–10k Input jack x 2 Min. input level; 80 mV Input impedance; 10 kΩ
Output terminals	:	Output jack x 2 Output level; 0–0.5 V Output impedance; 3.3 kΩ Matching load impedance; 50 kΩ or more Headphone jack x 1 Output level; 0–0.5 mW Matching impedance; 8Ω–1kΩ
DIN socket	:	Min. input level; 0.1 mV/kΩ Input impedance; 10 kΩ Output level; 0–0.5 V Output impedance; 3.3 kΩ Matching load impedance; 50 kΩ or more
Power requirement	:	AC 120 V, 60 Hz (KD-85C/J) AC 120 V, 220 V, 240 V, 50/60 Hz (KD-85A/B/E) AC 100 V, 120 V, 220 V, 50/60 Hz (KD-85U)
Power consumption	:	30 W
Dimensions	:	Width; 17-3/4" (450 mm) Height; 7-1/8" (158 mm) Depth; 12-7/8" (327 mm)
Weight	:	9.9 lbs (21.8 kg)

Design and specifications are subject to change without notice.

No. 4165

Features

- Full-logic 2-motor independent drive (ID) mechanism, with wow and flutter of 0.05 % (WRMS)
- Spectro-Peak Level Indicator (Utility Model pending), with its on-off switch
- Dual-ball cassette holder for stable tape transport
- SEN-ALLOY head for record/playback and two-gap ferrite head for erase
- ANRS and Super ANRS circuits in the IC form
- Geared and oil-damped cassette holder
- Recording equalizer switch for compensation of high frequency response
- Standby mechanism for repeated timer recording and playback
- Independent 3-step switchable bias and equalization tape select SWs.
- Memory counter
- Input selection for MIC/DIN or LINE
- Tape amount check light
- Direct recording from the playback mode. (During playback, the mode can be changed directly into the recording mode without stopping the tape.)
- Output level control possible.
- Rack handle mountable

Controls and Connections

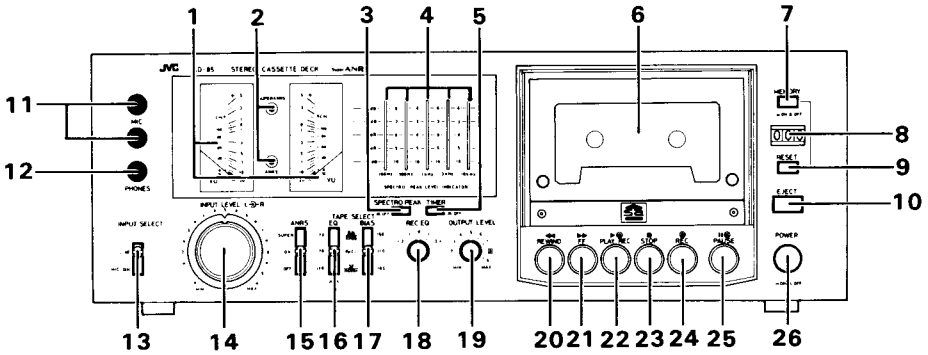

Fig. 1

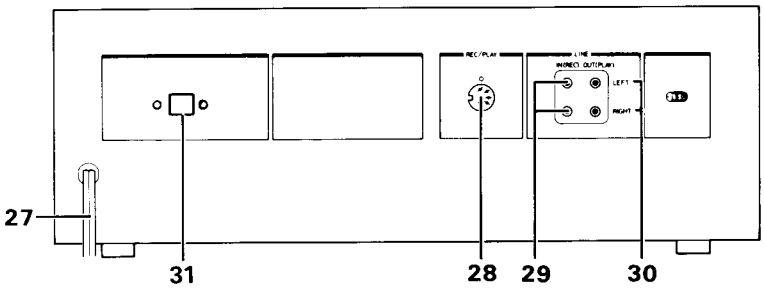

Fig. 2

1. Level meters
2. ANRS indicator
   Super ANRS indicator
3. SPECTRO-PEAK switch
4. SPECTRO-PEAK LEVEL INDICATOR
5. TIMER switch
6. Cassette door
7. MEMORY switch
8. Tape counter
9. Counter RESET button
10. EJECT button
11. Microphone jacks (MIC) L = Left channel
    R = Right channel
12. Headphone jack (PHONES)
13. INPUT SELECT switch
14. INPUT LEVEL controls inner knob = Left channel
    outer ring = Right channel
15. ANRS switch
16. Equalizer switch (EQ)
17. BIAS switch
18. Recording equalizer switch (REC EQ)
19. OUTPUT LEVEL control
20. Rewind button (◀◀ REWIND)
21. Fast forward button (▶▶FF)
22. Playback button (▶ PLAY/REC)
23. Stop button (■ STOP)
24. Recording button (REC)
25. Pause button (❚❚ PAUSE)
26. POWER switch
27. Power cord
28. DIN socket (REC/PLAY)
29. LINE IN (REC) terminals
30. LINE OUT (PLAY) terminals
31. Voltage select switch (KD-85A/B/E/U)

Main Parts Location

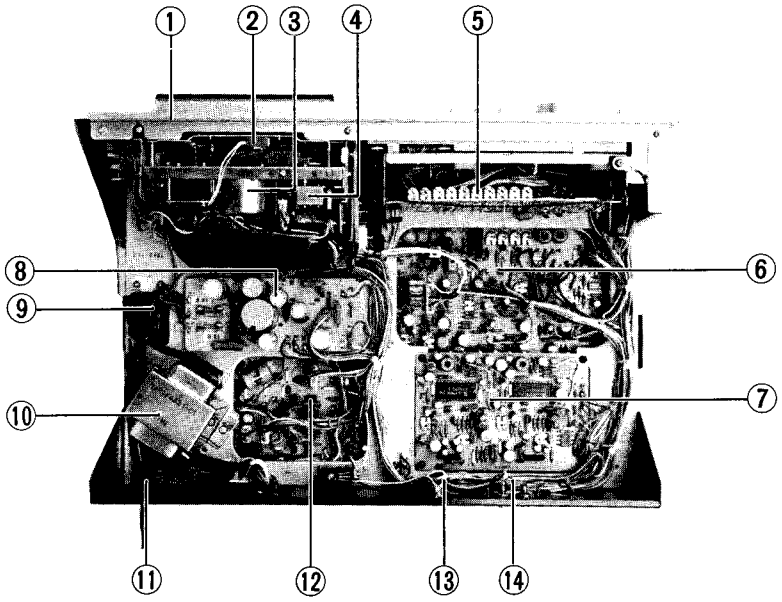

Fig. 3

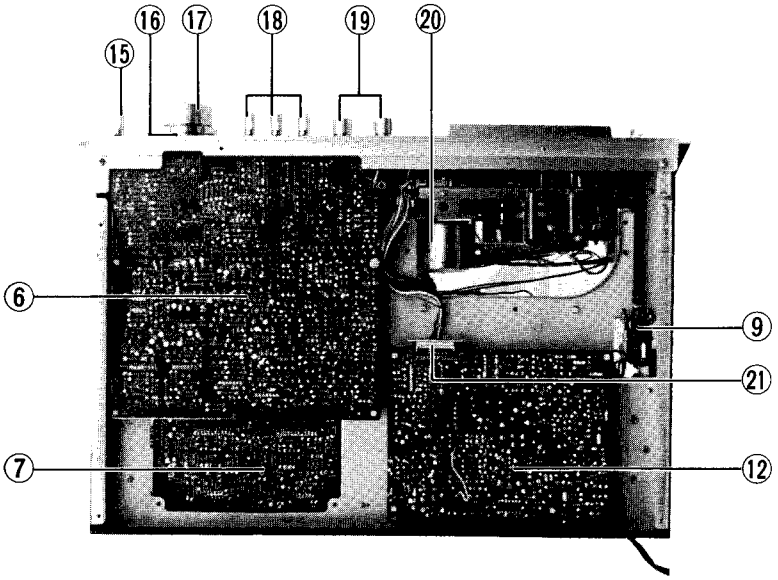

Fig. 4

1. Front panel ass'y
2. Pilot lamp and lamp cover
3. Reel motor
4. Solenoid ass'y for playback
5. Spectro-peak level P.W. board
6. Main amp. P.W. board
7. Super ANRS P.W. board
8. Power supply P.W. board
9. Power switch
10. Power transformer
11. Power cord
12. Control P.W. board
13. DIN socket
14. Pin jack ass'y
15. Select knob ass'y
16. Volume knob ass'y (Right channel)
17. Volume knob ass'y (Left channel)
18. Select knob ass'y
19. knob ass'y
20. Capstan motor
21. Socket ass'y

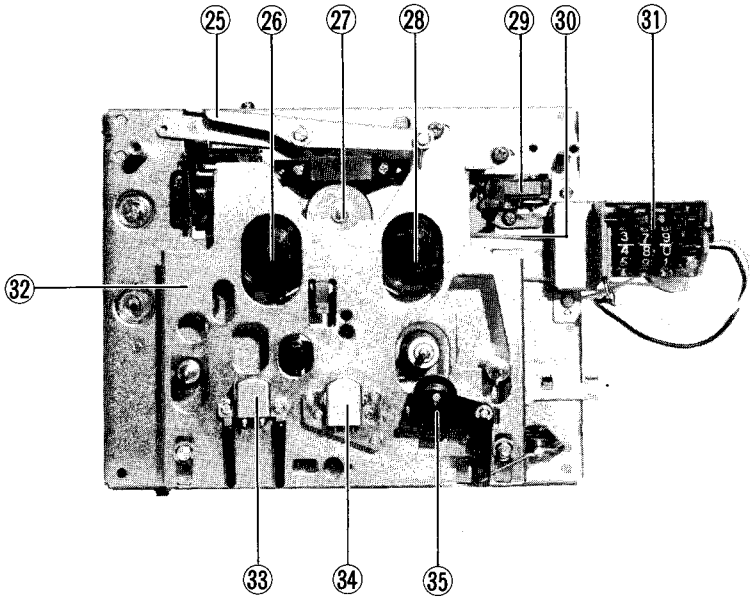

Fig. 5

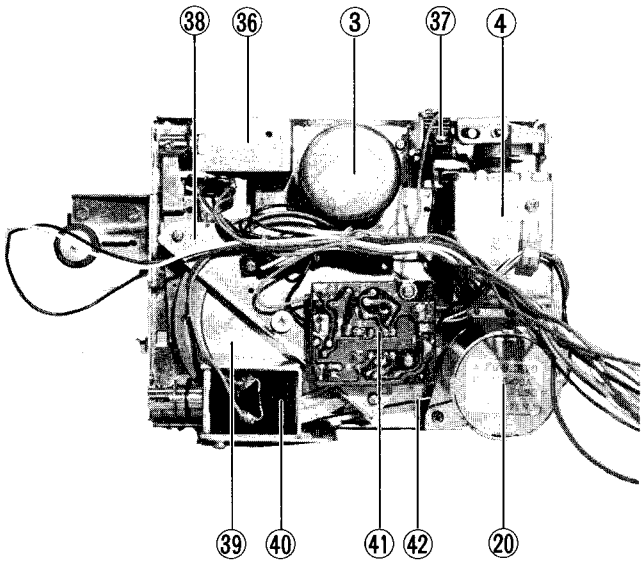

Fig. 6

25. Arm ass'y
26. Reel disk ass'y (Supply)
27. Idler ass'y
28. Reel disk ass'y (Take-up)
29. Microswitch
30. Counter belt
31. Counter ass'y
32. Slide base ass'y
33. Erase head
34. REC/PB head ass'y
35. Pinch roller bracket ass'y
36. Brake solenoid
37. Microswitch
38. Thrust holder
39. Flywheel ass'y
40. Solenoid (for Pause)
41. Motor P.W. board
42. Capstan belt

Information Regarding New Technical Developments

1. SPECTRO-PEAK LEVEL INDICATOR

General description

In further developing our well-acclaimed Multi-point Peak Level Indicators, we completed the new Spectro-Peak Level Indicator which can indicate the distribution of frequency components of the input signal. The input signal is split into five frequency bands, to each of which a set of Multi-point Peak Level Indicators belong and flash according to the peak level of that particular frequency range.

This Spectro-Peak Level Indicator provides the following advantages:

1) It permits an "at-a-glance" visual check of the levels and frequencies of audio signals.
2) In combination with the VU meters, it permits low-distortion recordings throughout the entire frequency range, making full use of the tape's dynamic range. Especially with cassette tapes checking of the signal levels at high frequencies is essential due to their limited dynamic range at high frequencies. The usual way of level control using the VU meters or previous peak level indicators is not sufficient. The Spectro-Peak Level Indicator, having five separate rows of LED's corresponding to five frequency bands, allows checking the signal level in the particular high frequency range, helping adjust the recording level for optimum recording of high frequency sounds with no feeling of distortion.
3) The Spectro-Peak Level Indicator permits enjoying the sound not only with the ears, but also with the eyes, by visualizing the sound signals.

Principle

Fig. 7 shows a block diagram of the Spectro-Peak Level Indicator. The input signal for each channel enters the emitter-follower and then, after being reduced in impedance, enters the five filters. These filters are composed of a low-pass filter ($fc = 1/2\pi C_1 R_1$), emitter-follower and high-pass filter ($fc = 1/2\pi C_2 R_2$) as shown in Fig. 8. The signal passes through the low-pass filter, emitter-follower and the high-pass filter in this order, and the emitter-follower functions in separating both filters. The frequency ranges and center frequencies of the five bands are as follows:

Band 1	50–200 Hz,	having a center frequency of	100 Hz
Band 2	160–600 Hz,	"	300 Hz
Band 3	500–2 kHz,	"	1 kHz
Band 4	1.6–6 kHz,	"	3 kHz
Band 5	Above 5 kHz,	"	10 kHz

For simplification of the circuit, only a high-pass filter is employed for band 5. The outputs of these five filters are applied to the Multi-point Peak Level Indicator circuits, the same as those on other JVC models, which cause the LED's to light at five levels of +6, +3, 0, −5 and −10 dB.

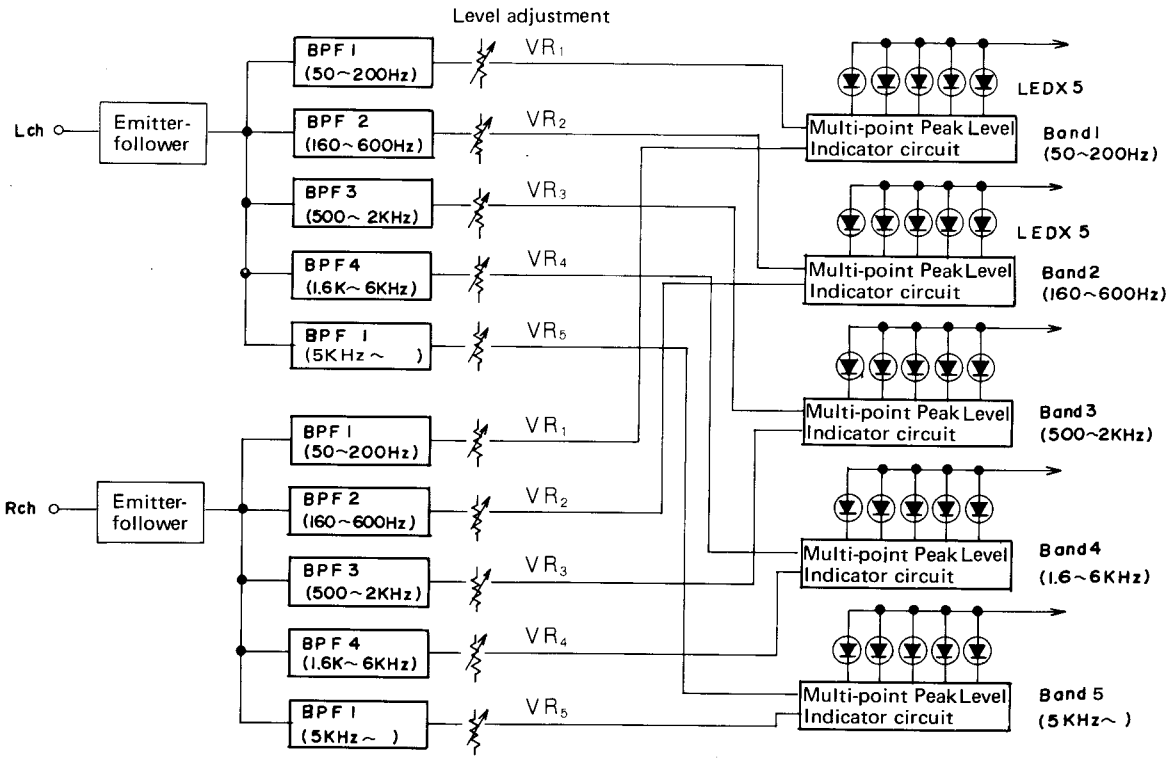

Fig. 7

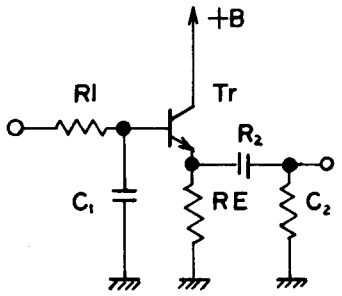

Fig. 8

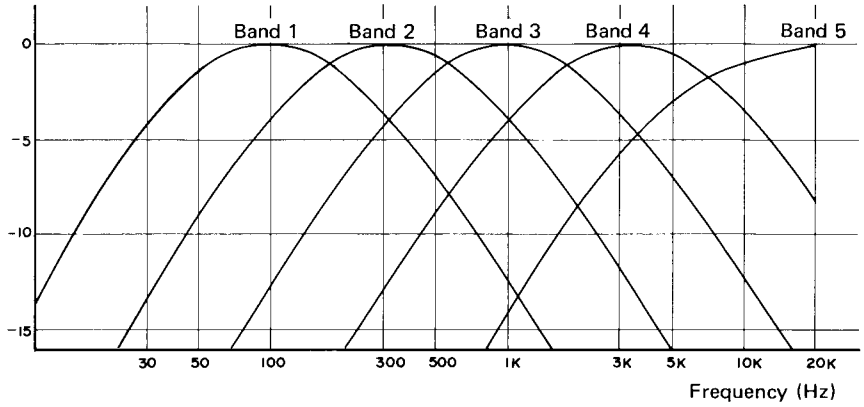

Fig. 9

2. CONTROL IC (M54410P)

1) Terminal connection diagram

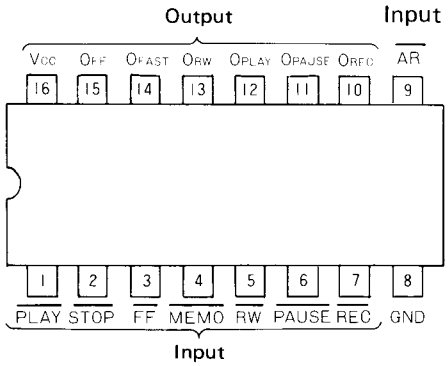

Fig. 10

2) Description of terminals

	Terminal Name	Terminal's Function
Operation input terminals	$\overline{\text{STOP}}$	To command stopping of operation
	$\overline{\text{FF}}$	To command fast-forwarding
	$\overline{\text{RW}}$	To command rewinding
	$\overline{\text{REC}}$	To command recording
	$\overline{\text{PAUSE}}$	To command pause stopping
	$\overline{\text{PLAY}}$	To command playback
Control input terminals	$\overline{\text{MEMO}}$	Memory input terminal
	$\overline{\text{AR}}$	To command prevention of recording
Output terminals	OFAST	Produces "H"-signal during FF and RW.
	OFF	Produces "H"-signal during FF.
	ORW	Produces "H"-signal during RW.
	OREC	Produces "H"-signal during REC/PLAY or REC/PAUSE.
	OPAUSE	Produces "H"-signal during PAUSE.
	OPLAY	Produces "H"-signal during PLAY.

3) Equivalent circuit

This IC is constructed of 5 flip-flops and various gates connecting them in different ways.

In the flip-flop, S represents "Set" and R represents "Reset", while the output is 1 when S = 0 and it is 0 when R = 0.

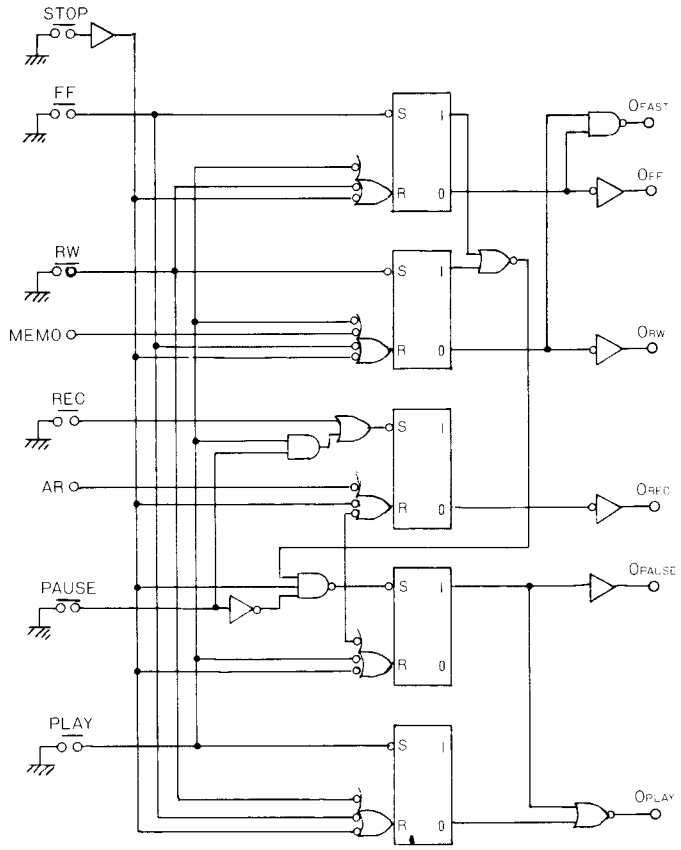

Fig. 11

4) Relationship between inputs and outputs

Input	Output						Output mode
	OFAST	OFF	ORE	OREC	OPAUSE	OPLAY	
$\overline{STOP}$	L	L	L	L	L	L	STOP mode
$\overline{FF}$	H	H	L	L	L	L	FF mode
$\overline{RW}$	H	L	H	L	L	L	RW mode
$\overline{PLAY}$	L	L	L	L	L	H	PLAY mode
$\overline{PAUSE}$	L	L	L	L	H	L	PAUSE mode
$\overline{REC}/\overline{PLAY}$	L	L	L	H	L	H	REC/PLAY mode
$\overline{REC}/\overline{PAUSE}$	L	L	L	H	H	L	REC/PAUSE mode

Notes:

1. The input signal shows a fall in the form of ⌉↓___⌈.
2. The output is maintained unchanged until the next input is applied.
3. $\overline{REC}/\overline{PLAY}$ mode is obtained by making both $\overline{REC}$ and $\overline{PLAY}$ outputs "L" simultaneously.
4. $\overline{REC}/\overline{PAUSE}$ mode is obtained by making both $\overline{REC}$ and $\overline{PAUSE}$ outputs "L" simultaneously.
5. $\overline{MEMO}$ and $\overline{AR}$ are the input terminals for control purposed. The ORW output becomes "L" when $\overline{MEMO}$ = "L". When the ORW output is "H", it becomes "L" with the signal of $\overline{MEMO}$ = "L".
   The OREC output is "L" when $\overline{AR}$ = "L". When the OREC output is "H", it becomes "L" with the signal of $\overline{AR}$ = "L".

3. TIMER RECORDING CIRCUIT

The KD-85 employs a timer recording circuit composed of NAND IC's. When the power is turned on, Vcc in this circuit is activated, causing a voltage (as shown by ② in Fig. 13) to be applied to terminal ②.
This voltage takes the form of ③ at the output of IC503-1, which is converted in sequence into the voltage of ⑥; the output voltage of this circuit. The REC or PLAY mode is entered by this voltage, allowing unattended automatic recording. The duration of recording or playback is determined by R_1, C_1 and R_2.

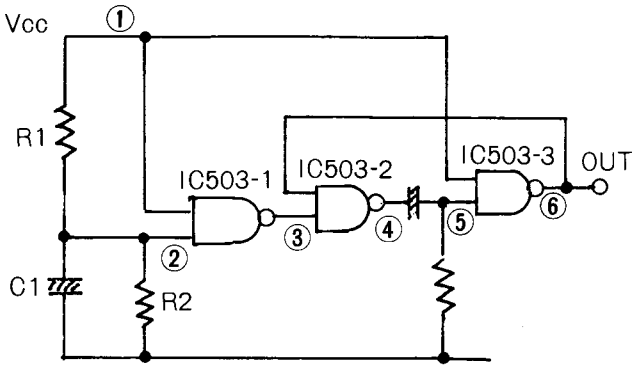

Fig. 12

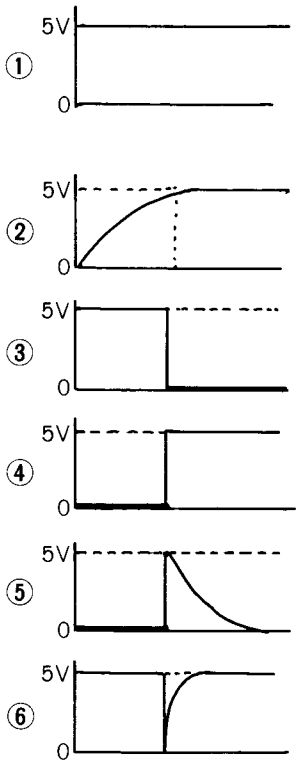

Fig. 13

Removal of the Main Parts

Observe care in handling the parts since the parts are small in size and the distance between them is short due to the deck design aimed mainly at compactness and high performance.

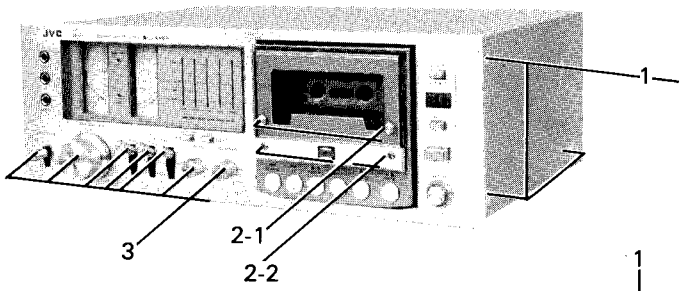

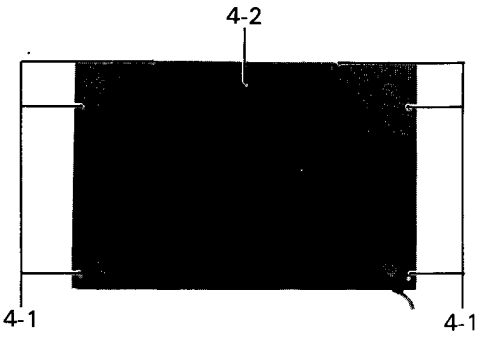

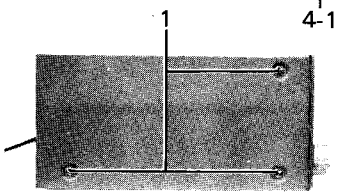

1. To remove the top cover, remove the 6 screws (3 each on the left and right sides).
2. (2-1) To remove the lid cover, remove the 2 screws.
   (2-2) To remove the head cover, remove hexagonal screw with a hexagonal wrench.
3. To remove the knobs, pull them forwards.
   [INPUT SELECT, INPUT LEVEL (L-R), ANRS, TAPE SELECT (EQ/BIAS, REC EQ, OUTPUT LEVEL]
4. To remove the bottom plate,
   (4-1) remove the 6 tapping screws.
   (4-2) remove the screw (center front).

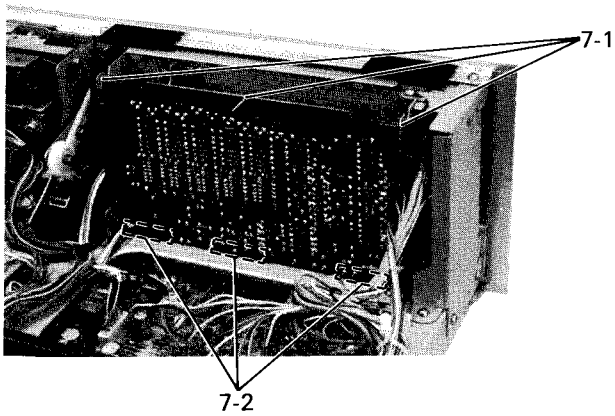

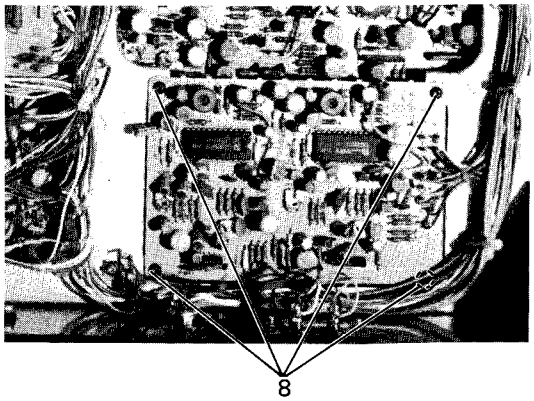

7. To removal the Spectro-Peak Level circuit board,
   (7-1) remove the securing wire (spring bar) on the upper part of the circuit board.
   Remove the wire center from the circuit board tabs.
   Remove the wire ends from the left and right brackets.
   (7-2) Pull the lower part of the circuit board from the 3 chassis holes.
8. To remove the ANRS circuit board, remove the 4 tapping screws.
9. To remove the power supply circuit board,]-remove the circuit board supporter from the circuit board.
10. To remove the control circuit board,

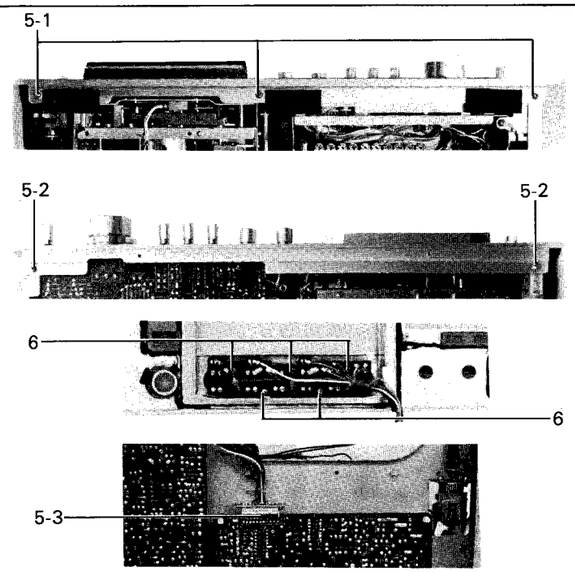

5. To remove the front plate,
   (5-1) remove the 3 screws securing the front plate at its upper part.
   (5-2) remove the 3 screws securing the front plate at its lower part.
   (5-3) pull out the operation circuit board socket assembly from the control circuit board.
6. To remove the operation circuit board, remove the 5 screws securing the front plate.

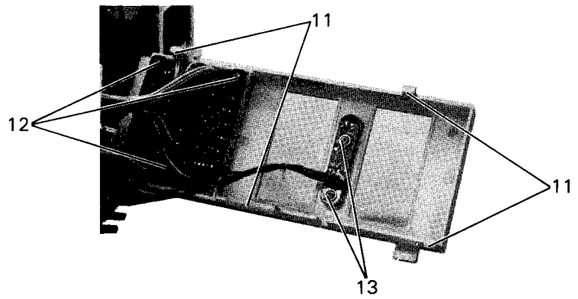

11. To remove the Spectro-Peak Level escutcheon, remove the pawls of the Spectro-Peak Level escutcheon from the meter bracket.
    Upper part – 2
    Lower part – 2
    Note: Be sure not to break the pawls in this removal.
12. To remove the Spectro-Peak Level circuit board and the holder, remove the 3 screws.
13. To remove the ANRS indicator circuit board, remove the 2 screws.
14. To remove the microphone jack assembly, remove the 2 screws.

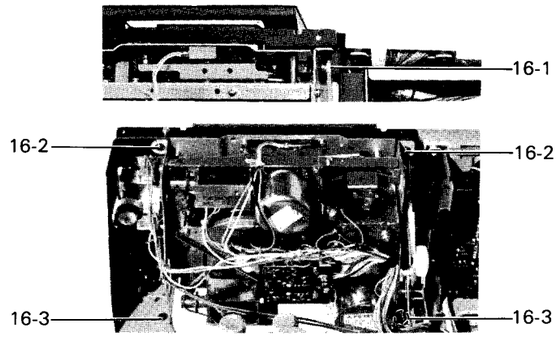

16. Removal of the mechanical assembly.
    (16-1) remove the rack plate from the damper lever.
    (16-2) remove the 4 screws (2 each on the left and right sides) securing the chassis to the front bracket.
    (16-3) remove the 2 tapping screws (1 each on the left and on the right) securing the mechanical assembly to the base frame.
    Then, pull the mechanical assembly backwards.
    Note: Exercise care with the memory switch wire as it may block the removal.

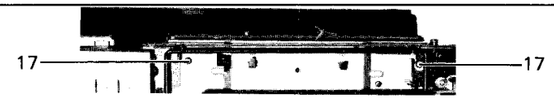

17. To remove the holder plate, remove the 2 screws.
    The holder plate is removed together with those parts related to the dual ball cassette holder mechanism, panel plate and those parts related to the indicators attached to it.

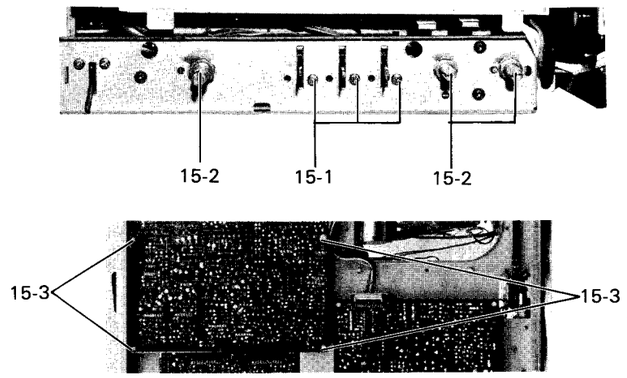

15. To remove the main amplifier circuit board,
    (15-1) remove the 3 screws securing the switches.
    (15-2) remove the 3 nuts and washers of the controls.
    (15-3) remove the 4 circuit board supporters with a plier.

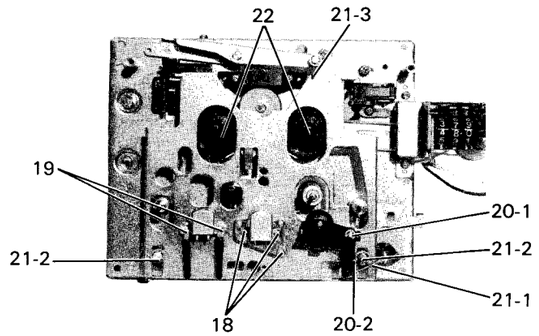

18. To remove the record/playback head, remove the 3 screws.
    (the 3 screws are removed at the same time.)
19. To remove the eraser head, remove the 2 screws.
    (the 2 wire clamps, 1 spring and 1 collar are removed at the same time.)
20. To remove the pinch roller assembly,
    (20-1) remove the E-ring.
    (20-2) remove the wire (for the pause mechanism).
21. To remove the slide base,
    (21-1) remove the wire (for the pause mechanism).
    (21-2) remove the left and right E-rings.
    (21-3) remove the wire (for the sliding base).
22. To remove the reel disc assembly, remove the reel stopper.
    Note: Remove the reel stopper by inserting a piece of sheet metal between the reel disc and the stopper.

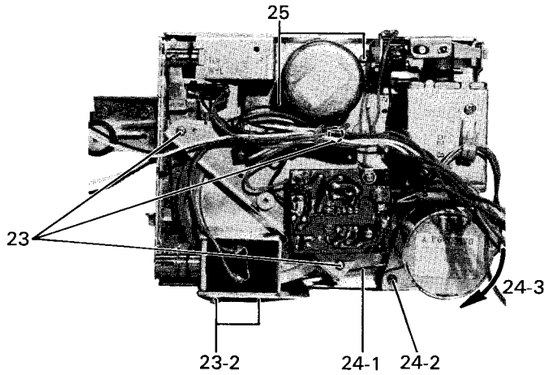

23. To remove the flywheel,
    (23-1) remove the 3 screws securing the flywheel brackets.
    (23-2) remove the 2 screws (for the pause solenoid).
    Then, pull out the flywheel.
    Note: When replacing the flywheel, be sure to employ washers and springs.
24. To remove the capstan motor,
    (24-1) remove the capstan belt.
    (24-2) remove the stopper by removing the screw.
    (24-3) turn the motor clockwise and pull it for removal.
25. To remove the reel motor, remove the 2 screws.

Main Adjustment

[I] Equipment and measuring instruments used for adjustment

1. Electrical adjustment
   1) Electronic voltmeter
   2) Audio frequency oscillator
      (range; 50 Hz – 20 kHz and output 0 dB with impedance 600 Ω)
   3) Attenuator
   4) Reference tapes for REC/PB
      BASF QP-12 – normal tape
      Maxell UD – SF tape
      TDK SA – chrome tape
      } or equivalent
   5) Reference tapes for playback (JVC Test Tapes)
      VTT-658 (for head azimuth adj.)
      VTT-656 (for motor speed, wow flutter adj.)
      VTT-664 (for Reference level 1 kHz)
      VTT-675N (for playback frequency response)
   6) Resistors
      100 Ω (for measurement of the bias current)
      600 Ω (for attenuator matching)
2. Mechanical adjustment
   1) Gauge for checking the head position
   2) Torque gauge
   3) Blank tape (C-120) for tape running checker

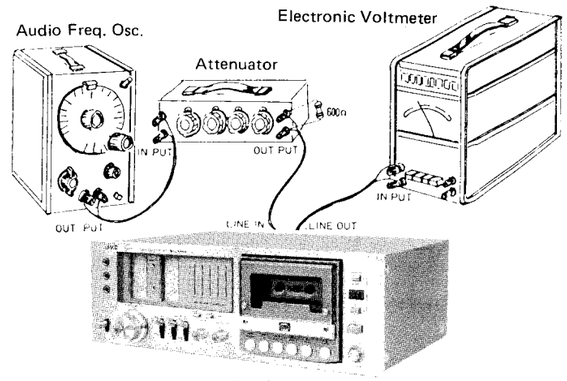

KD-85

[II] Electrical circuit adjustment procedure

In all the steps (marked by an asterisk *) except the "Adjusting bias current", the adjustment is important. Be sure to perform it.

Adjustment should be performed in the sequential numerical order of the following:

Playback system – Set the output level control at maximum. –

Step	Item	Adjustment	Adjusting point	Standard value	Remarks
1*	Adjusting the VU meter deflection angle	1. Set the cassette deck to its recording mode. 2. Apply a 1 kHz, approx. –10 dBs signal to the LINE IN terminals. Adjust the recording level controls until the signal is available at –4 dBs at the LINE OUT terminals. 3. Adjust VR102 and VR202 until the VU meters deflect to 0.	Main amplifier circuit board VR102, 202	–4 dBs 0 VU	Perform this adjustment when the parts are replaced.
2*	Adjusting Spectro-Peak level indicator	1. Apply a 1 kHz signal separately to the left and right channels of the LINE IN terminals. Adjust the recording level controls until the signal is available at –4 dBs at the LINE OUT terminals 2. Adjust the following semi-fixed resistors until the "0 dB" indicators extinguish with the input level reduced by 0.3 dB.	Spectro-Peak circuit board 100 Hz 300 Hz 1 kHz 3 kHz 10 kHz	For left channel VRE05 VRE04 VRE03 VRE02 VRE01	For right channel VRF05 VRF04 VRF03 VRF02 VRF01
3*	Adjusting playback level	Set the tape selector to the normal position. Play back the VTT-664 test tape. Adjust VR-101 and VR201 until the output at LINE OUT terminals is available at –4 dB.	Main amplifier circuit board VR101, 201	–4 dBs	This adjustment becomes necessary when a change in playback results (for example, due to head replacement). Perform this adjustment with the recording level controls set to maximum.

Recording system – Use MAXELL UD at SF mode, TDK SA at chroma mode and BASF QP-12 at normal mode.

Step	Item	Adjustment	Adjusting point	Standard value	Remarks
4*	Checking record/playback frequency response	Set the ANRS switch to the OFF position. Record 1 kHz, 50 Hz and 10 kHz signals at an input level of 0 VU –20 dB. Play back the tape. Check to see that the 50 Hz and 10 kHz signal output deviations fall within the standard range, using the 1 kHz signal output as a reference. (It is generally desirable that the 1 kHz, 50 Hz and 10 kHz signal outputs are the same.)	For normal tape; VR105, 205 For CrO_2 tape; VR106, 206	Reference frequency; 1 kHz 0 ± 3 dB at 50 Hz 0 ± 3 dB at 10 kHz	The input level of 0 VU –20 dB is one reduced by 20 dB from the 0 VU level by the attenuator. Perform the adjustment for normal and CrO_2 tapes as well as both for left and right channels.
5	Checking recording bias current	1. Set the cassette deck to its recording mode. 2. Connect 100 Ω resistor to the grounding terminal and the lead wire of the record/playback head as shown below. Adjust the voltage at both ends of the resistor so as to conform the standard value. 3. Remove the resistor from the head and connect its lead wire as before. Measure the record/playback frequency response of 10 kHz, referring to that of 1 kHz, with a recording/playback standard tape. Fine-adjust the semi-fixed resistors until the 10 kHz frequency response becomes ± 0 dB, varying by ± 10% to the standard level. Repeat the recording and playback until a correct frequency response is obtained. If the level is raised with 10 kHz, →the bias current is small. If the level is lowered with 10 kHz, →the bias current is large. 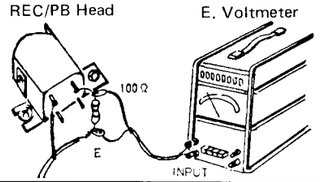 	For CrO_2 tape; VR106, 206 For normal VR105, 205	For CrO_2 tape; 46.5 mV For normal tape; 31 mV	In order to distinguish the – terminal of the head from its + terminal, touch the terminals with a finger while the deck is in the playback mode. The VU meters deflect when the – terminal during recording is touched. (For a record/playback head, the polarity is reversed according to whether recording or playback.) If the bias current is not properly adjusted, the record and playback characteristics become as shown below. 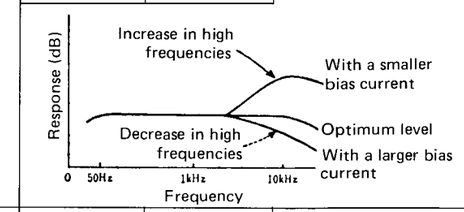
6*	Adjusting recording current level	1. Set the deck to its recording mode. 2. Apply a 1 kHz signal to the LINE IN terminals. Adjust the recording level controls until the signal is available at –4 dBs at LINE OUT terminals. 3. Play back the recorded tape. Adjust the semi-fixed resistors shown on the right until the signal is available at –4 dB at the LINE OUT terminals. (Repeat the adjustment until you obtain the value.)	Main amplifier circuit board Normal tape; VR103, 203 CrO_2 tape; VR104, 204	LINE OUT –4 dBs	The adjustment becomes necessary when the head is replaced. The adjustment should be performed after the adjustment steps 1–5 are finished. Set the EQ and BIAS switch according to the tape used. The level difference between the right and left channels for normal, SF and chrome tapes should be within 1 dB (1 VU).
7*	Checking Super ANRS circuit	1. Unsolder the BIAS CUT printing position on the main amplifier circuit board to stop the bias oscillation. 2. Set the deck to its recording mode. 3. Apply a 1 kHz, 0 dBs signal to the LINE IN terminals. Adjust the LINE IN level control until the signal is available at –1 dBs at the LINE OUT terminals.	Super ANRS circuit board TAA344208	–1 dBs	Refer to the Super ANRS circuit board. The adjustment in steps 5 and 6 should be performed repeatedly. VU meter deflection should be to the position marked CAL.

Step	Item	Adjustment	Adjusting point	Standard value	Remarks
7*	Checking Super ANRS circuit	4. Connect an electronic voltmeter to the pins 8 and 9 of the ANRS circuit.			
		5. Reduce the input level by 40 dB. Adjust the VRA01 and B01 until the outputs at the pins 8 and 9, with the ANRS switch set to ON, are larger by 5.5 dB than those with the ANRS switch set to OFF.	VRA01, B01	+5.5 dB	
		6. Apply an input signal of 5 kHz, −20 dB (with the ATT being increased by 20 dB compared with step 5). Adjust the VRA02 and B02 until the outputs at the pins 8 and 9 with the ANRS switch set to ON are larger by 3.5 dB than those with the ANRS switch set to OFF.	VRA02, B02	3.5 dB	
		7. Apply an input signal of 1 kHz and adjust the output from LINE OUT to −1 dBs.		−1 dBs	
		Check to see that the level difference between the states with the ANRS switch ON and OFF is nil (within ± 5 dB).		± 0.5 dB	
		8. Apply an input signal of 10 kHz. Check to see that the output at the pins with the ANRS switch set to OFF is decreased by 6 dB with the Super ANRS switch set to ON.		−6 dB	
		9. Play back the VTT-664 test tape. Check to see that the output difference at the pins with the ANRS switch set to ON and then set to OFF is within ± 1 dB.			
		10. Solder the BIAS CUT printing position (+B) to the bias circuit board.			

[III] **Mechanical adjustment**

Item	Adjustment	Adjusting point	Standard value	Remarks
Adjusting record/playback head height 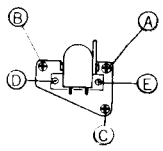 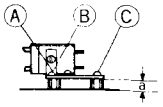	1. Adjust the screws Ⓐ, Ⓑ and Ⓒ until the distance "a" becomes approx. 5 mm. Collars are employed in the spring of the screws Ⓐ and Ⓒ, and designed so that the 5 mm distance can be obtained by loosening the screws which have been fully tightened up to the collar height, by a half turn.	Screw Ⓐ, Ⓑ and Ⓒ.	Approx. 5 mm	Head adjustment can be performed if the head cover is removed. (To remove the head cover, loosen the 2 hexagonal screws with a hexagonal wrench.) Head replacement: If the head is worn, disconnected or exceedingly magnetized so as not to provide the necessary characteristics, replace it with a new one. To replace the head, remove the 2 screws Ⓓ and Ⓔ. After replacing the head, reset the screw with bond. When employing bond to the screw, be careful not to apply it within the groove of the screw head. After the head replacement, the head position adjustment, as well as the playback level adjustment, the bias current adjustment and the recording current level adjustment are all necessary.
	2. Employ a special cassette (C-120) from which parts of the casing, where the erase head, record/playback head and capstan engage, has been cut away. Perform tape transport with the cassette. Check to see if the tape runs in the center of the tape head guide. If not, adjust in the following method:	Screw Ⓐ		
	1) If the tape runs, making contact with the upper guide. Loosen screw Ⓐ. 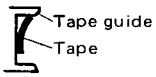			
	2) If the tape runs, making contact with the lower guide. Tighten screw Ⓐ. 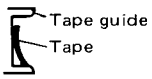			
	3. Connect an electronic voltmeter to the LINE OUT or REC/PB terminals.			

Item	Adjustment	Adjusting point	Standard value	Remarks
Adjusting record/playback head height	4. If the outputs for the left and right channels are different, adjust the head angle with screw Ⓒ. 1) If the output for the right channel is smaller, loosen screw Ⓒ. 2) If the output for the left channel is smaller, tighten screw Ⓒ. 5. Play back the VTT-658 test tape (10 kHz, for azimuth adjustment). Adjust screw Ⓑ until the reading on the electronic voltmeter becomes maximum. 6. After adjustment, apply bond to screws Ⓐ, Ⓑ and Ⓒ to prevent their loosening.	Screw Ⓒ Screw Ⓑ	Maximum	
Adjusting erase head height 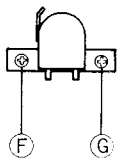 	Employ a special cassette (C-120) from which parts of the casing (where the erase head, record/playback head and capstan engage) has been cut away. Perform tape transport with the cassette tape. Adjust screw Ⓕ until the tape runs centered within the erase head tape guide. 	Screw F		Be sure to perform this adjustment after replacing the erase head.
Adjusting playback solenoid position	1. Loosen the 2 screws of the playback solenoid. 2. Retain the sliding base in the playback position. 3. With the sliding base retained in the playback position, secure the 2 screws for playback solenoid position adjusting, with their damping rubbers (attached on the movable iron core of the playback solenoid) making contact with the playback solenoid.	After adjusting the playback solenoid position, be sure to adjust the pause solenoid position. (See "Pause Solenoid" section.) 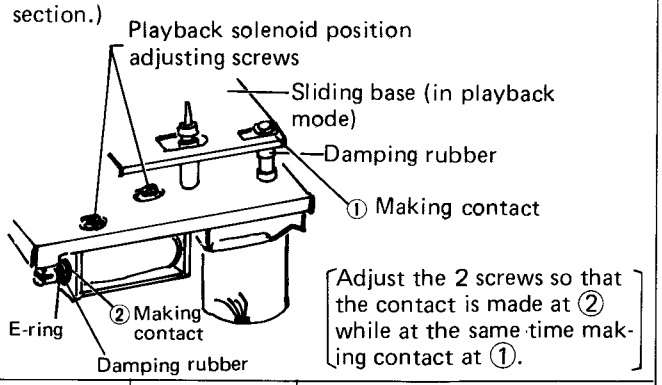 		
Adjusting brake solenoid position	Loosen the 2 screws securing the brake solenoid for adjusting the solenoid position.			
Adjusting pause solenoid position	Adjust the position by bending the pause lever in the direction shown in the figure. Pinch-roller stroke adjustment Bending the pause lever in the direction ① increases the clearance between the pause capstan shaft and the pinch-roller. Bending the pause lever in the direction ② decreases the clearance. The clearance should be approx. 0.5 mm.	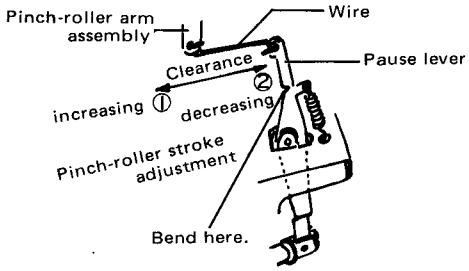 		
Adjusting motor speed	Play back the VTT-656 test tape. Connect a speedometer to the LINE OUT terminals of the deck. Adjust the semi-fixed resistor on the motor circuit board until the reading on the speedometer becomes 3000 Hz ± 1.5%.		3000 Hz ±1.5% (2955 Hz –3045 Hz)	If the speedometer is included in a wow and flutter meter, connect the deck to the INPUT terminals of the meter.

Item	Adjustment	Adjusting point	Standard value	Remarks
Checking playback torque	Employ a torque testing cassette tape for the checking. Or employ a torque gauge.		40–70 gr-cm	If the standard torque is not obtained, 1) clean the reel motor pulley, idler circumference, right reel and disc circumference. 2) replace the take-up idler arm, spring, etc.
Checking fast-forward torque	Measure the torque in the fast forward mode in the same manner as in the above.		More than 70 gr-cm	If the standard torque is not obtained, 1) clean the idler circumference, motor pulley, take-up reel disc circumference, etc. 2) replace the idler, take-up reel disc assembly, etc.
Checking rewind torque	Measure the torque in the rewind mode in the same manner as in the above.		More than 70 gr-cm	If the standard torque is not obtained, 1) clean the idler, motor pulley, supply reel disc circumference, etc. 2) replace the idler, supply reel disc, etc.
Damping oil	Oil employed – Torque grease specified by JVC (KANTO KASEI, GP-608) Applying method – Apply within both concaved sections as shown in the figure.	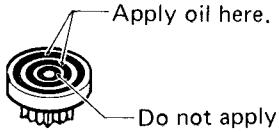		

[IV] Repair of Wow and Flutter

If wow and flutter increase, check the following points. If there is defect in revolving parts, the wow and flutter generated will increase in proportion to the number of revolutions.

Play a 3000 Hz test tape, and defective part can be detected from the sound.

Section	Trouble	Repair
Capstan and flywheel	Capstan shaft has excessive run-out. Flywheel turns heavily. (shaft seisure, thrust play, etc.)	Replace flywheel. Clean the capstan shaft and the groove in the flywheel. Apply oil to the metal position. Replace the capstan assembly.
Pinch roller	Rough rotation (Deformation scratches, or dust.) The angular position of the pinch roller is not correct. The pinch roller pressure is not correct.	Replace pinch roller, or pinch roller spring. Clean the pinch roller or apply oil to the rotary shaft. Adjust the pinch roller so that it is parallel with the capstan shaft. Replace the pinch roller spring.
Belt	Belt has undue run-out. Belt is dirty or slippery.	Clean the belt. Replace the belt.
Back tension	Back tension is irregular, or back tension is too strong.	Replace back tension spring (under supply disc).
Motor	Motor shaft has undue run-out. Motor pulley is oily and dusty.	Replace motor. Clean motor pulley.
Take-up idler arm	Pulley has deflection. Pulley is stuck.	Replace take-up idler arm.

Block Diagram

Recording System

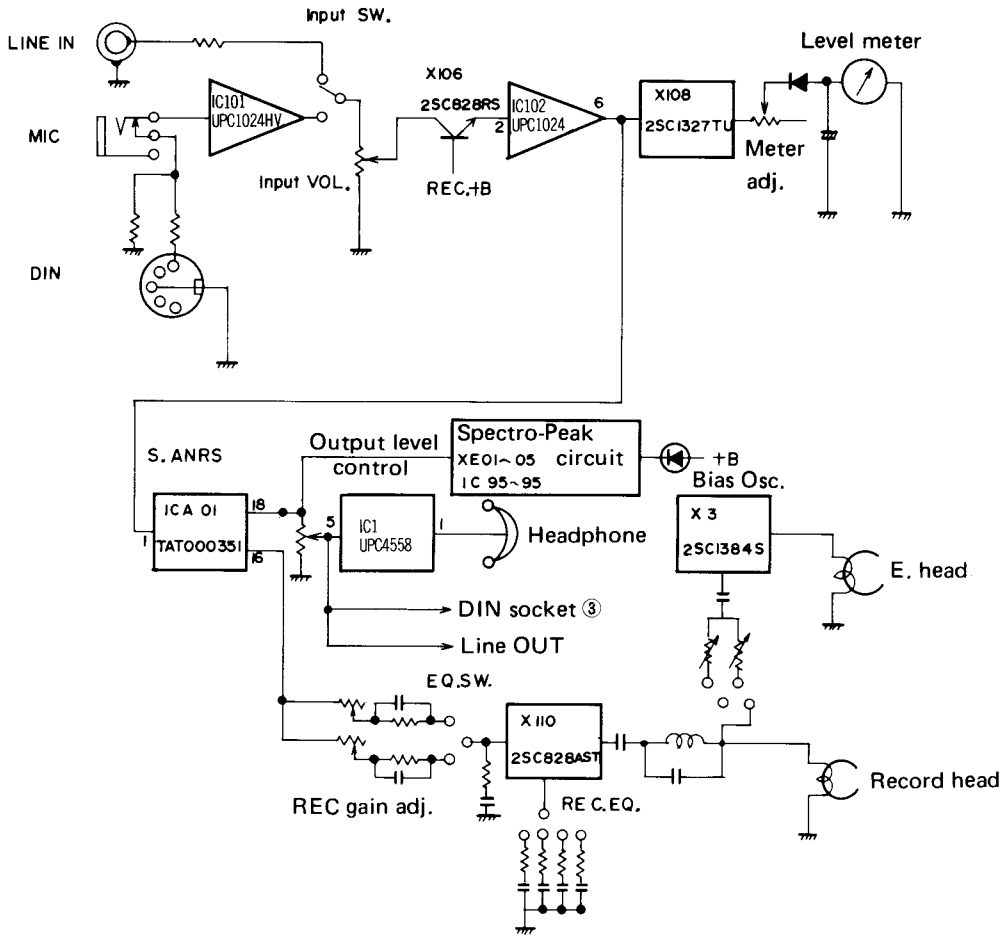

Fig. 14

Playback System

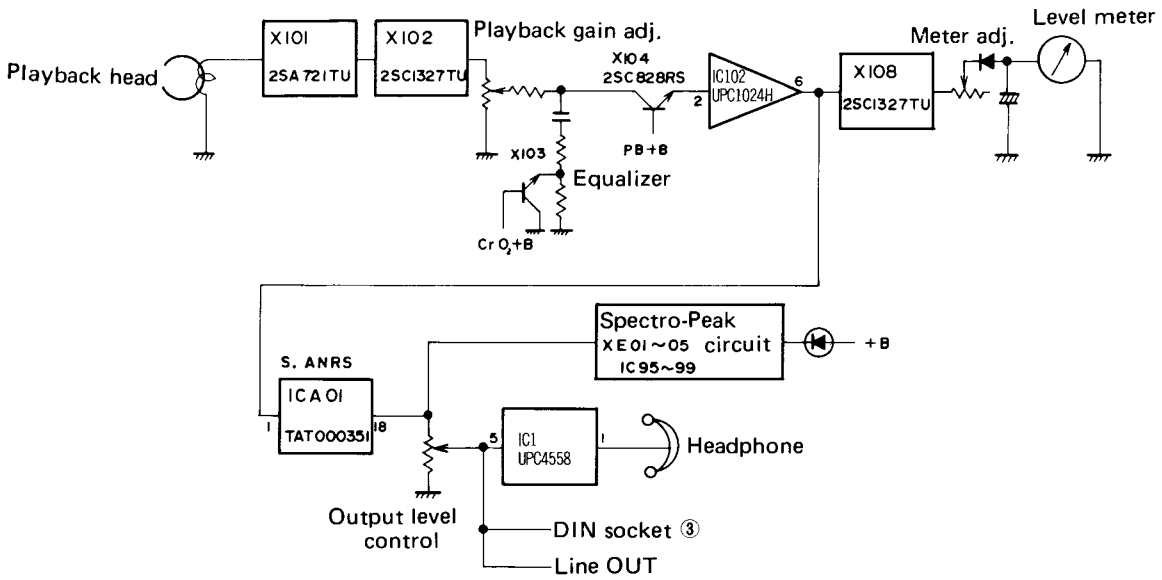

Fig. 15

Mechanical Control System

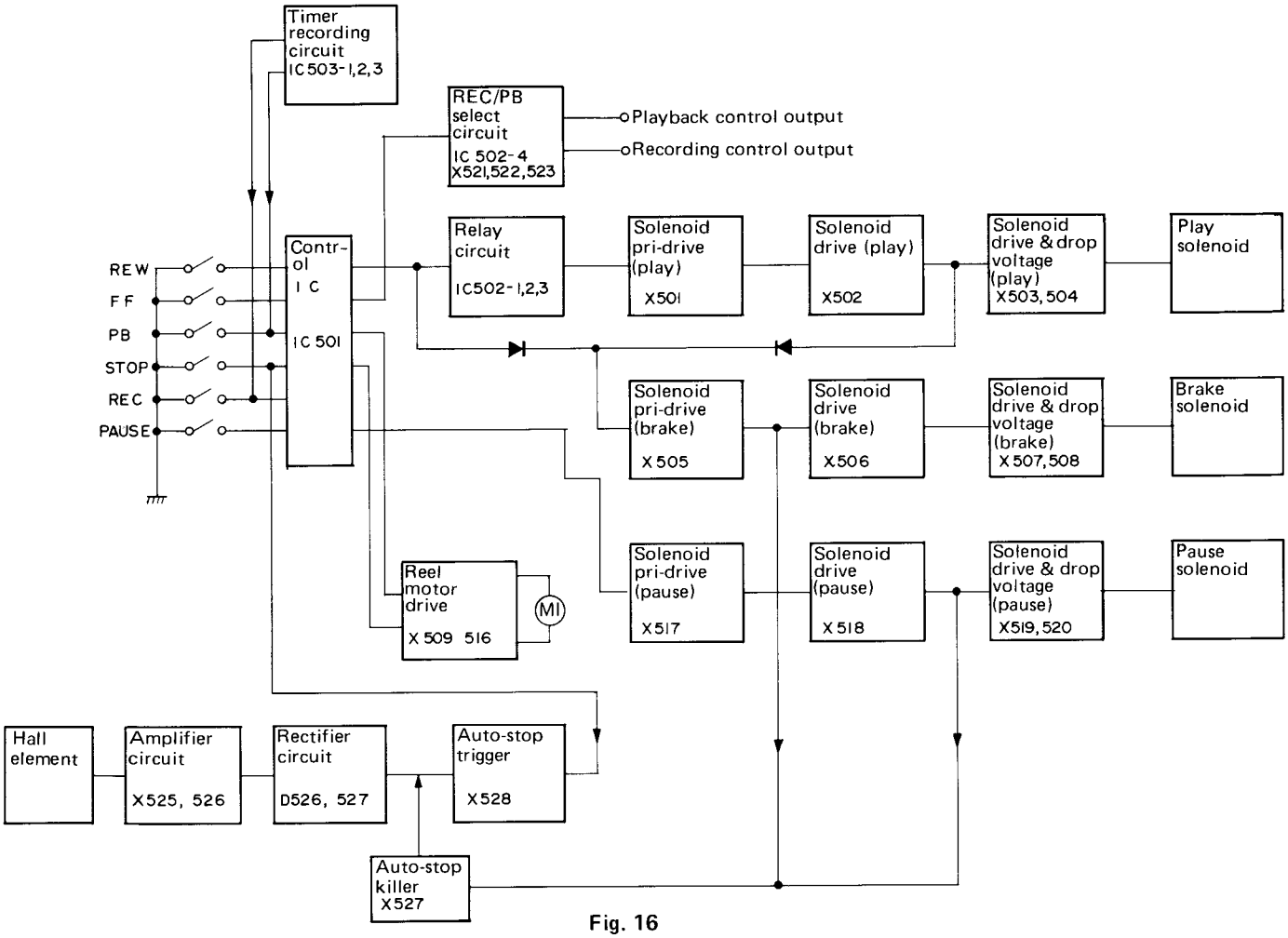

Fig. 16

[Variable resistors]

VRA01, B01	QVP8A0B-023	DC bias adj.	Super ANRS P.W. board
VRA02, B02	QVP8A0B-024	Control amp. gain adj.	
VRE01–05	QVP6A0B-024	L-channel Spectro-Peak level adj.	Spectro-Peak level P.W. board
VRF01–05	QVP6A0B-024	R-channel Spectro-Peak level adj.	

	L-channel	R-channel
100 Hz	VRE05	VRF05
300 Hz	VRE04	VRF04
1 kHz	VRE03	VRF03
3 kHz	VRE02	VRF02
10 kHz	VRE01	VRF01

VR101, 201	QVP8A0B-024	Playback level adj.
VR102, 202	" -023	Meter gain adj.
VR103, 203	" -024	REC/PB level adj.(normal)
VR104, 204	" -024	" " (chrome)
VR105, 205	QVP4A0B-104	REC/PB frequency response adj. (normal)
VR106, 206	QVP4A0B-104	REC/PB frequency response adj. (chrome)
	QVE5A3A-054V	Input level
	QVD2A2A-024V	Output level

[Switches]

S01	QSP1110-221	Power SW at OFF	
S02	VKC6101-001T	Counter SW at OFF (on at 999)	
S03	QSP2210-045	Memory SW at OFF	
S04	QSM1V11-103	REC Proof SW at REC start	
S05	QSM1S01-015	Tape safety SW at OFF	
S501	QSP0022-001	REW SW at OFF	Switch P.W. board
S502	" -001	FF SW at OFF	
S503	" -001	Playback SW at OFF	
S504	" -001	Stop SW at OFF	
S505	" -001	REC SW at OFF	
	QSR4645-200	REC Equalizer SW	Main amp. P.W. board
	QSL2312-002	ANRS SW	
	QSL4312-002	Bias SW	
	QSL8312-003	Equalizer SW	
	QSL2212-007	Input Select SW	
	QSP0229-008	Spectro-Peak level & Timer SW	

No. 4165

[Transistors]

XE01–E05	2SC828RS	Si. Transistor	Spectro-Peak level P.W. board
XF01–F05	"	"	
X101, 201	2SA721TU	Si. Transistor	Main amp. P.W. board
X102, 202	2SC1327TU	"	
X103,203,104, 204,105,205, 106,206,107, 207,109,209, 111,211, 2	2SC828RS	"	
X108, 208	2SC1327U	"	
X110, 210	2SC828AST	"	
X1	2SC1383RS	"	
X3	2SC1384S	"	
X501,502,505, 506,509,510, 515,516,517, 518,521,522, 524,525,526, 527,528	2SC828RS	"	Control P.W. board
X503	2SC1847R	"	
X504,508,520	2SC1383S	"	
X507,519	2SC1384S	"	
X511,512,513, 514	2SC1383RS	"	
X523,529	2SA564RS	"	
X601	2SC1162WTBC	"	Power supply P.W. board

[Diodes]

DA01, B01 A02, B02	1S188FM	Ge. diode	Super ANRS P.W. board
DA03, B03	1S2076A	Si. diode	
DE01–05 F01–05	1S2075K-23	Si. diode	Spectro-Peak level P.W. board
DE95–99	"	"	
D101,201, 102,202	0A90	Ge. diode	Main amp. P.W. board
D5	T30155-001	Si. diode	
D1–3	1S2076A	"	
D503,504,505, 506,509,512, 513,514,517, 520,522,523, 528,521,534	1S2076A	"	Control P.W. board
D501,526,527, 529,530,531, 532,535,536	1S188FM	Ge. diode	
D507,510,524	T30155-001 (10E1)	Si. diode	
D508	RD4.3EC	Zener diode	
D516,519	RD10E	"	
D601–604	T30155-001	Si. diode	Power supply P.W. board
D605	RD24E(1)	Zener diode	
D606	RD5.1FB	"	
	T30155-001	Si. diode	(for playback, brake and pause solenoids)

[ICs]

ICA02, B02	TA7140P-BC	Super ANRS P.W. board
ICA01, B01	TAT000351-01	
ICE95–99	LB1415S	Spectro-Peak level P.W. board
IC101, 201	UPC1024HV	Main amp. P.W. board
IC102, 202	UPC1024H	
IC1	UPC4558C	
IC501	U54410P	Control P.W. board
IC502, 503	TD3400AP	

TA7140P

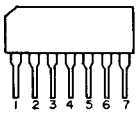

Equivalent circuit

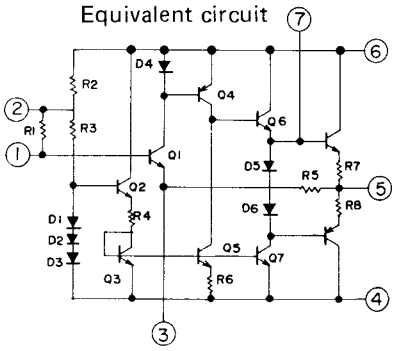

TAT000351-01 (Top view)

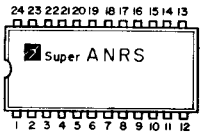

LB1415

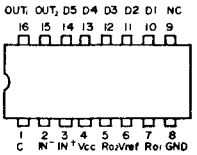

UPC1024H

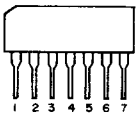

Equivalent circuit

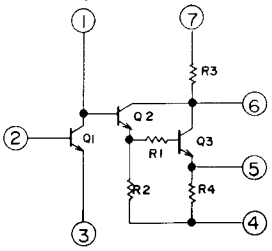

UPC4558C

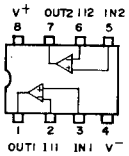

Equivalent circuit (1/2)

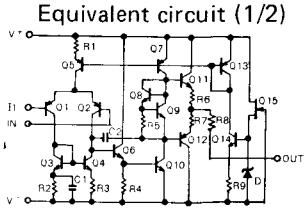

TD3400AP

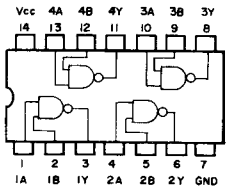

Equivalent circuit

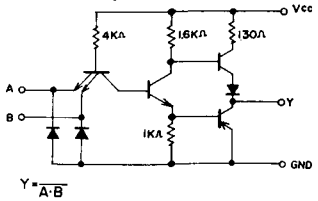

IC501 M54410P is instructed in the "Information regarding new technical developments". (See page 7.)

No. 4165

Wiring Connection of KD-85

(Amprifier Circuit)

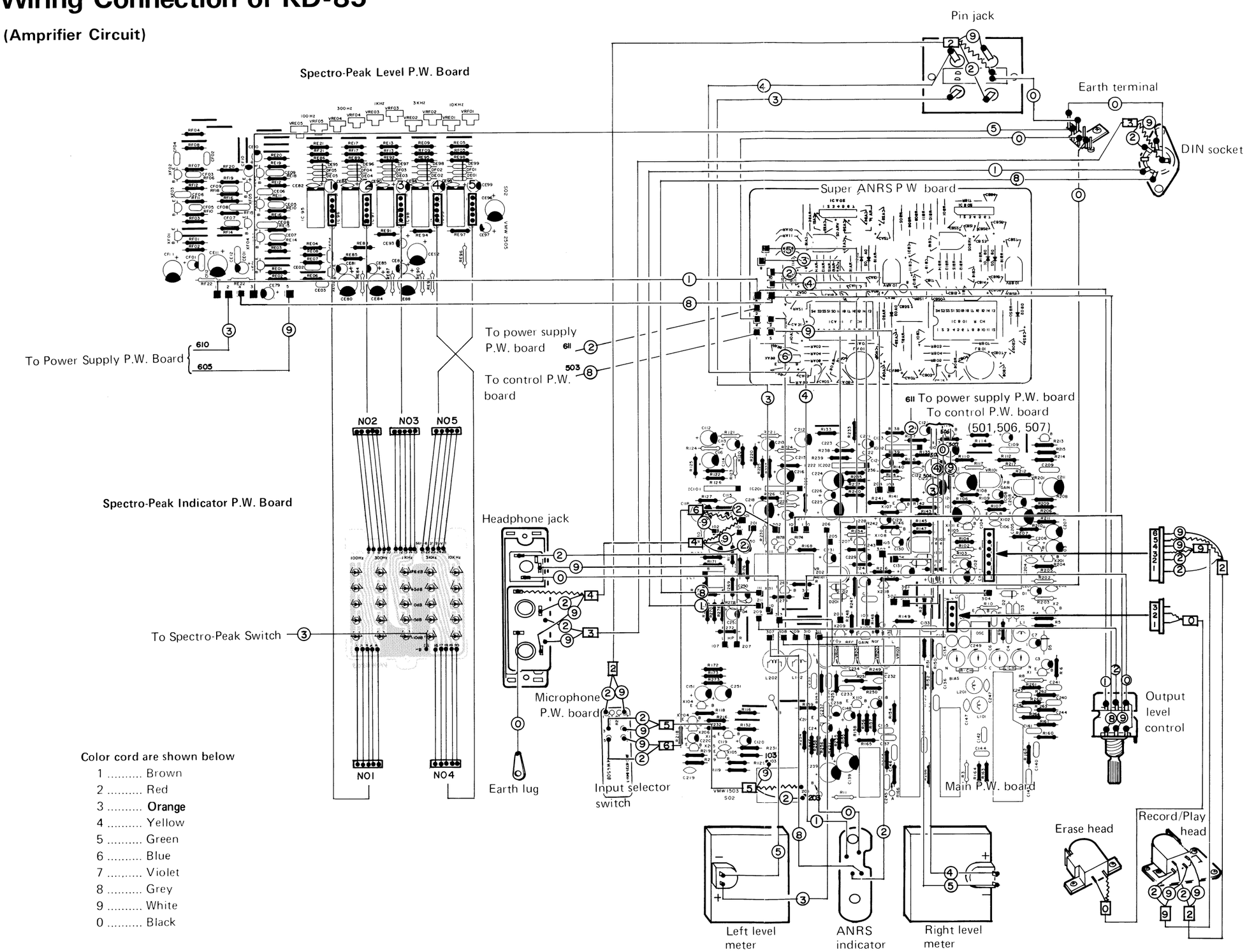

Wiring Connection of KD-85

(Mecha. Control Circuit)

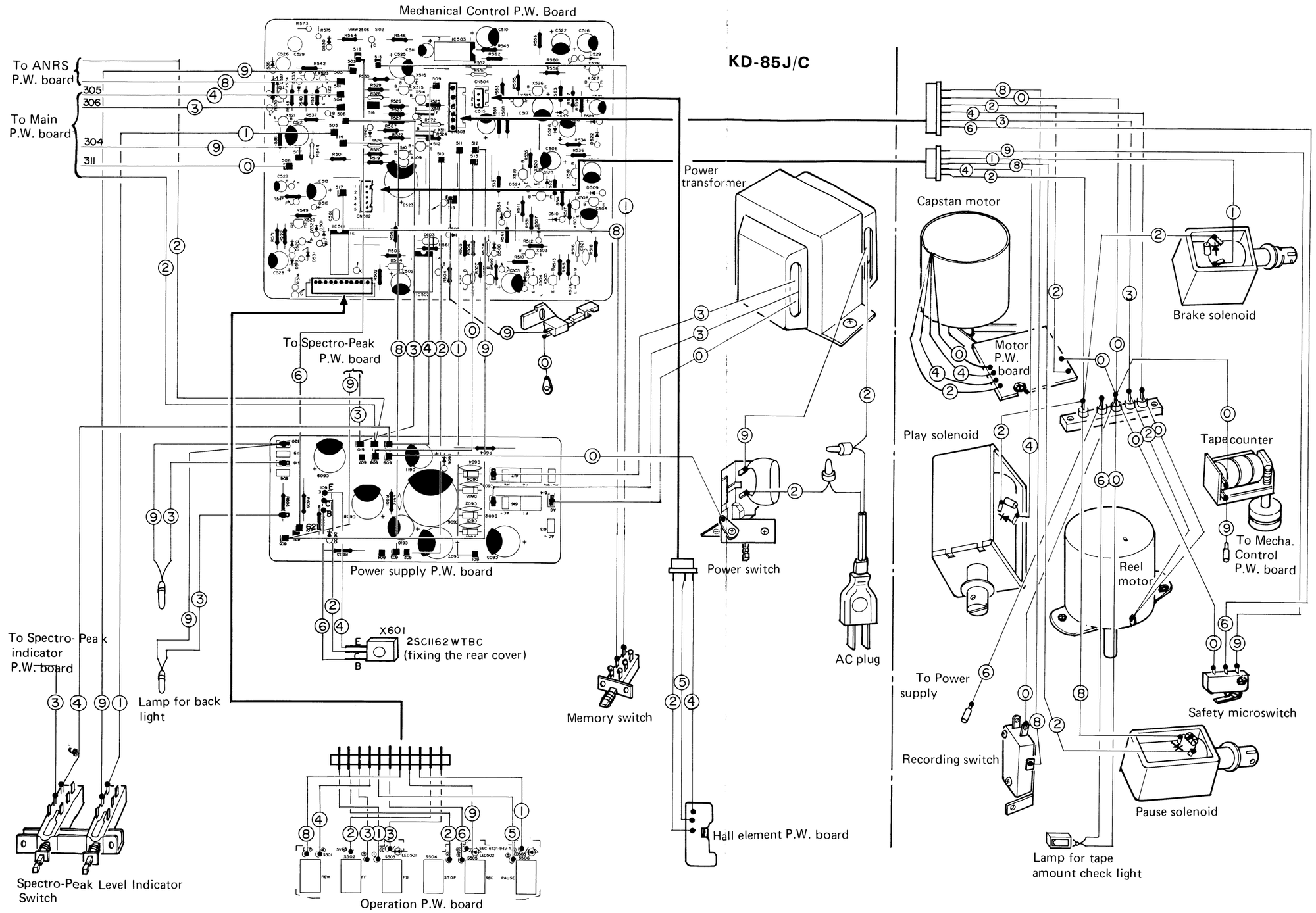

KD-85A/B/E

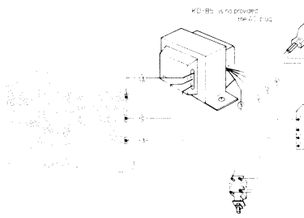

KD-85U

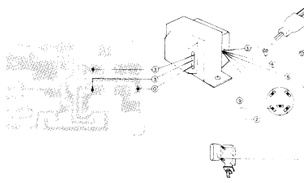

Standard Schematic Diagram of KD-85

(Amprifier Circuit)

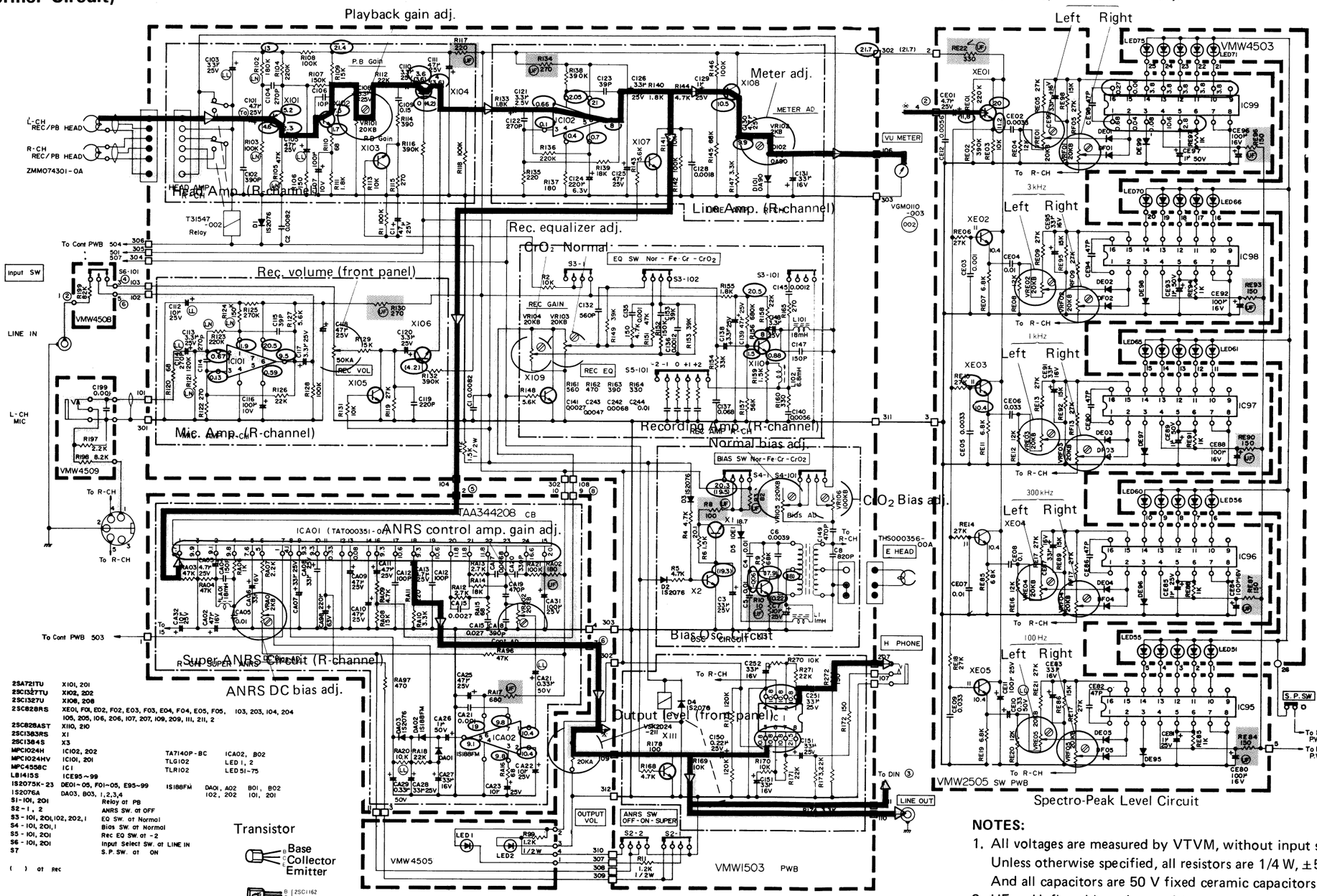

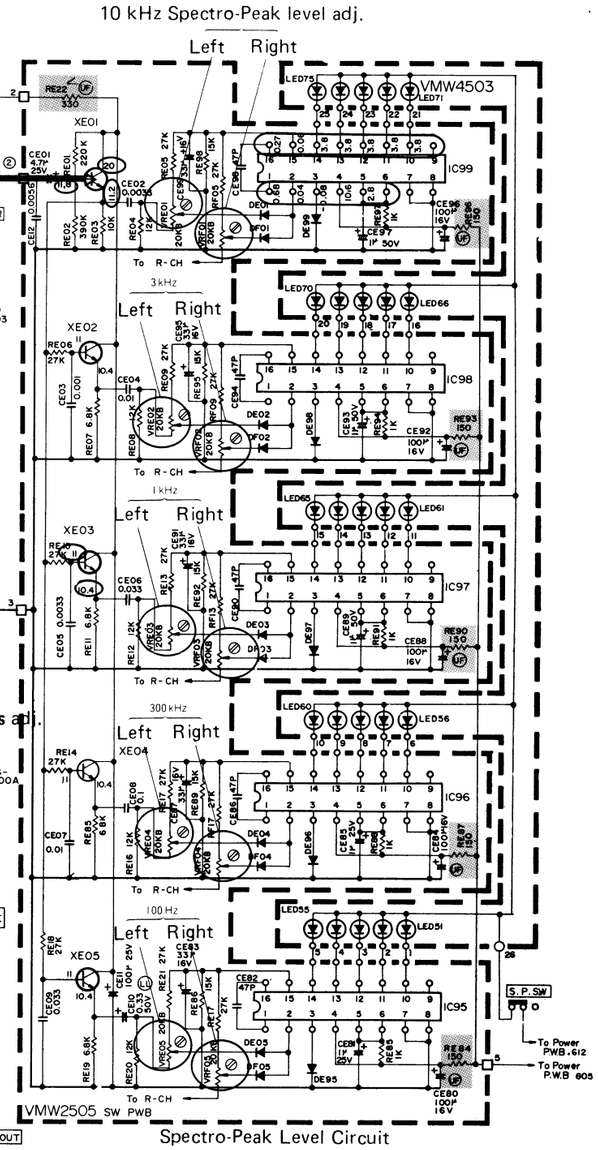

NOTES:

1. All voltages are measured by VTVM, without input signal at REC mode.
   Unless otherwise specified, all resistors are 1/4 W, ±5% carbon resistors.
   And all capacitors are 50 V fixed ceramic capacitors or 50 V mylar capacitors.
2. UF – Unflamable carbon resistor
   MF – Metal film resistor
   OMF– Oxided metal film resistor
   Ta – Tantalum solid electrolytic capacitor
   LL – +20% low leak current electrolytic capacitor
   PP – Polypropylene capacitor
   PS – Polystyrene capacitor
   MM – Metallized mylar capacitor
   NP – Non-polarized electrolytic capacitor
3. Blue line shows the signal at recording.
   Red line shows the signal at playback.
4. ▒▒▒ parts are safety assurance parts. When replacing those parts, make sure to use the specified one.

No. 4165

Standard Schematic Diagram of KD-85

(Mecha. Control Circuit)

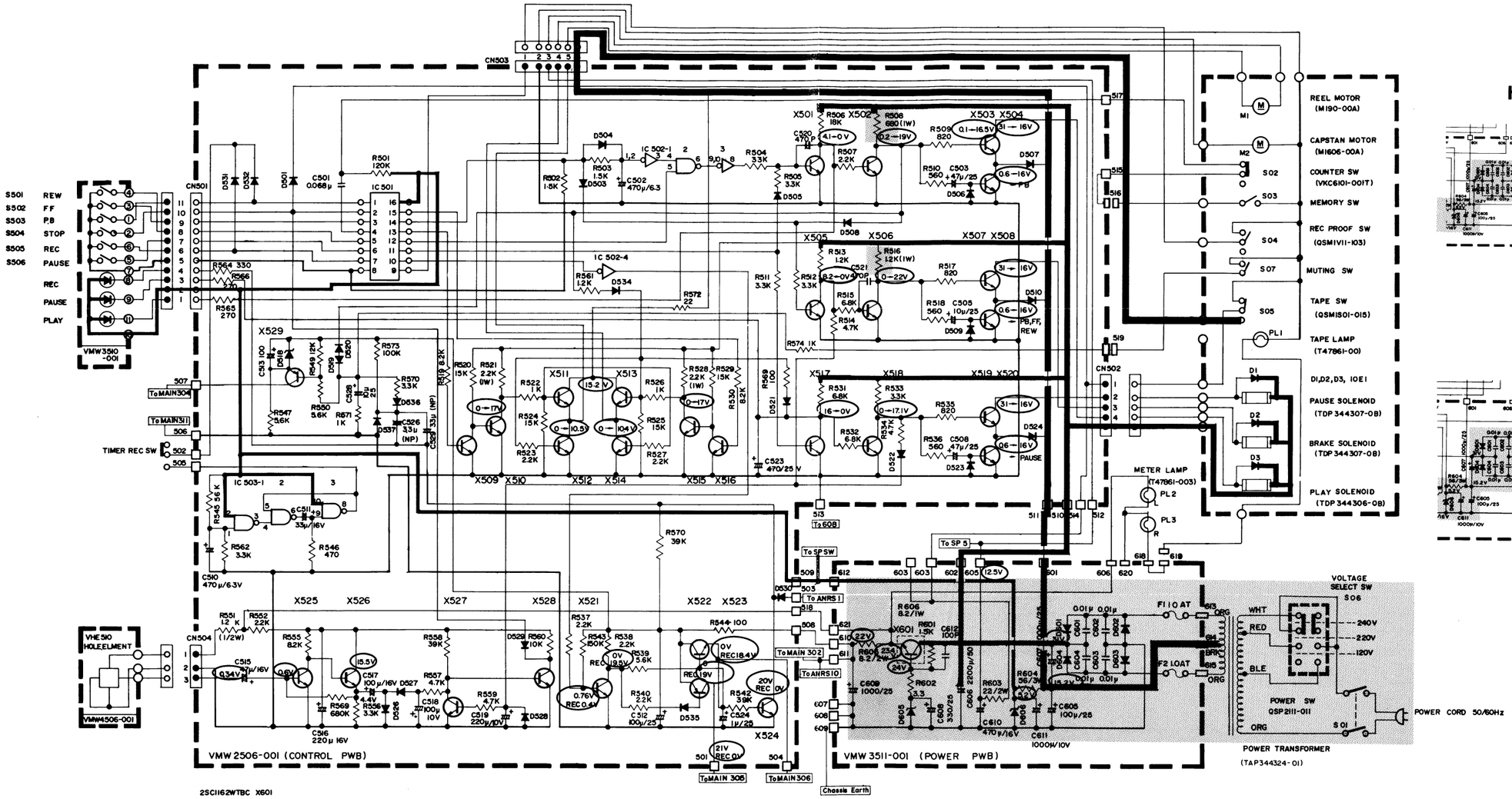

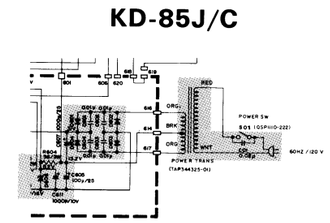

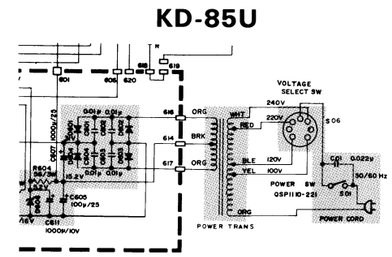

2SC1162WTBC	X601
2SA564RS	X523, X529
2SC828RS	X501, X502, X505, X506, X509, X510 X515, X516, X517, X518, X521, X522 X524, X525, X526, X527, X528
2SC1383S	X504, X508, X520
2SC1847QR	X511, X513
2SC1384S	X507, X512, X514, X519
2SC1847R	X503
M54410P	IC 501
TD3400AP	IC 502, 503
1S2076A	D503, D504, D505, D506, D508, D509 D512, D513, D514, D517, D520, D522 D523, D528, D521, D534, D537
1S188FM	D501, D526, D527, D529, D530, D531 D532, D535, D536
T30155-001 (10E1)	D507, D510, D524, D601, D602, D603, D604
RD43EC	D518
RD10E	D519
RD5, IFB	D606
RD24E	D605

S01	POWER SW AT OFF
S02	COUNTER SW AT OFF (ON AT 999)
S03	MEMORY SW AT OFF
S04	REC PROOF SW AT REC STATE
S05	TAPE SW AT OFF
S501	REW SW AT OFF
S502	FF SW AT OFF
S503	P B SW AT OFF
S504	STOP SW AT OFF
S505	REC SW AT OFF
S506	PAUSE SW AT OFF
S 07	MUTING SW AT OFF

Transistor

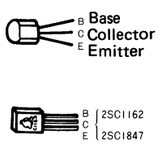

Diode

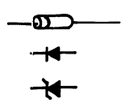

NOTES:

1. All voltages are measured by VTVM, without input signal at REC mode.
   Unless otherwise specified, all resistors are 1/4 W, ±5% carbon resistors.
   And all capacitors are 50 V fixed ceramic capacitors or 50 V mylar capacitors.
2. UF — Unflamable carbon resistor
   MF — Metal film resistor
   OMF— Oxided metal film resistor
   Ta — Tantalum solid electrolytic capacitor
   LL — +20% low leak current electrolytic capacitor
   PP — Polypropylene capacitor
   PS — Polystyrene capacitor
   MM — Metallized mylar capacitor
   NP — Non-polarized electrolytic capacitor
3. Red lines show +B circuits.
4. ▒ parts are safety assurance parts. When replacing those parts, make sure to use the specified one.

Maintenance

To get long, trouble-free service, maintenance is important. Do not forget cleaning and demagnetizing.

Cleaning

After long use, the heads and tape part – capstan, pinch roller, etc. – will become dirty with dust or magnetic particles. Dirty heads cause imperfect erasing or high frequency drop-off. A dirty capstan and pinch roller will cause unstable tape speed, leading to increased wow and flutter. Always keep them clean by following the procedure below.

1. Cleaning the heads

1) Remove the front transparent cover.

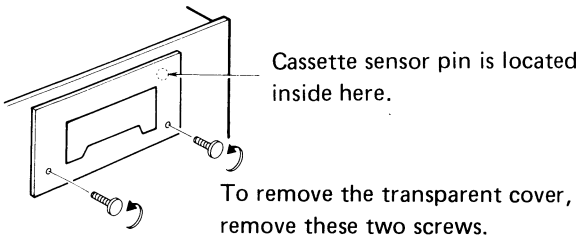

Fig. 17

2) Press the EJECT button to open the inner frame.
3) Wipe the record/play and erase heads with the supplied cleaning stick with its cotton tip dipped in alcohol.

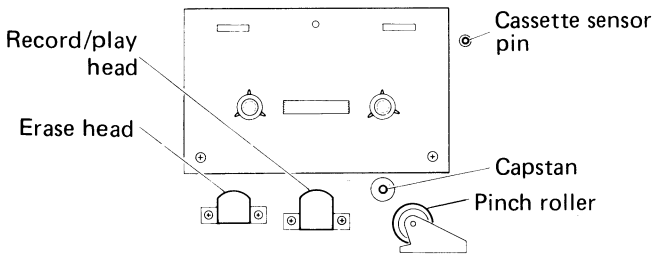

Fig. 18

2. Cleaning the pinch roller and capstan

4) Switch on the power.
5) While holding the cassette sensor pin, press the REC/PLAY button.
6) Apply the cotton tip to the rotating pinch roller and capstan. (Wipe from the right side of the capstan to prevent the cotton from being entangled.)

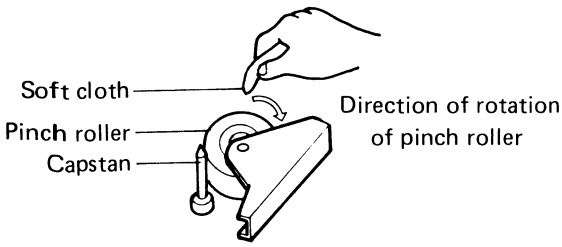

Fig. 19

7) After completion of the cleaning, close the inner frame and replace the transparent cover.

Notes: ○ Do not insert a cassette until the cleaned parts completely dry of alcohol.
○ Do not use thinner or benzine to clean the heads.

3. Demagnetizing the record/play head

– POWER switch OFF –

After a long period of use, hissing noise may have increased or, in extreme cases, high frequencies may be erased due to the record/play head being magnetized. Demagnetize the metallic part of the head which comes in contact with the tape periodically (every 20 or 30 hours of use) using a head demagnetizer. For details refer to the instruction manual for the head demagnetizer.

4. Cleaning the cabinet and panel

Wipe the cabinet and panel clean with a soft cloth dipped in a neutral cleaner. Do nut use thinner, benzine, alcohol or other strong solvents, as these will cause damage to the surface finish of the cabinet and panel.

Oiling

Feed one or two drops of machine oil to the rewind roller shaft, pinch roller shaft and magnet pulley shaft once or twice a year under normal conditions of use.

Avoid oiling them excessively, or rotation may become irregular because of oil splashes.

Printed Wiring Board Parts

Main Amp. P.W Board

		1	2	3	4	5	6	7
IC101 IC201	E. Volt	1.9	0.67	0.13	0	0.59	9.5	20.5
	C. Tester	1.6	0.2	0.1	0	0.6	9.8	20.5
IC102 IC202	E. Volt	2.05	0.66	0.1	0.4	0.7	8	21
	C. Tester	2	0	0	0.4	0.7	7.8	21

		1	2	3	4	5	6	7	8
IC1	E. Volt	10.8	10.8	10.8	0	10.8	10.8	10.8	21.5
	C. Tester	10.8	10.8	10.8	0	10.8	10.8	10.8	10.8

		E. Volt	C. Tester
X104 X204	B	4.2 0	3.0 0
	C	3.6	4
	E	4.0	2.9
X106 X206	B	4.2	3.0
	C	3.6 0	4 0
	E	4.0	2.9

* Black printed voltage value shows it at playback.
Red printed voltage value shows it at recording.

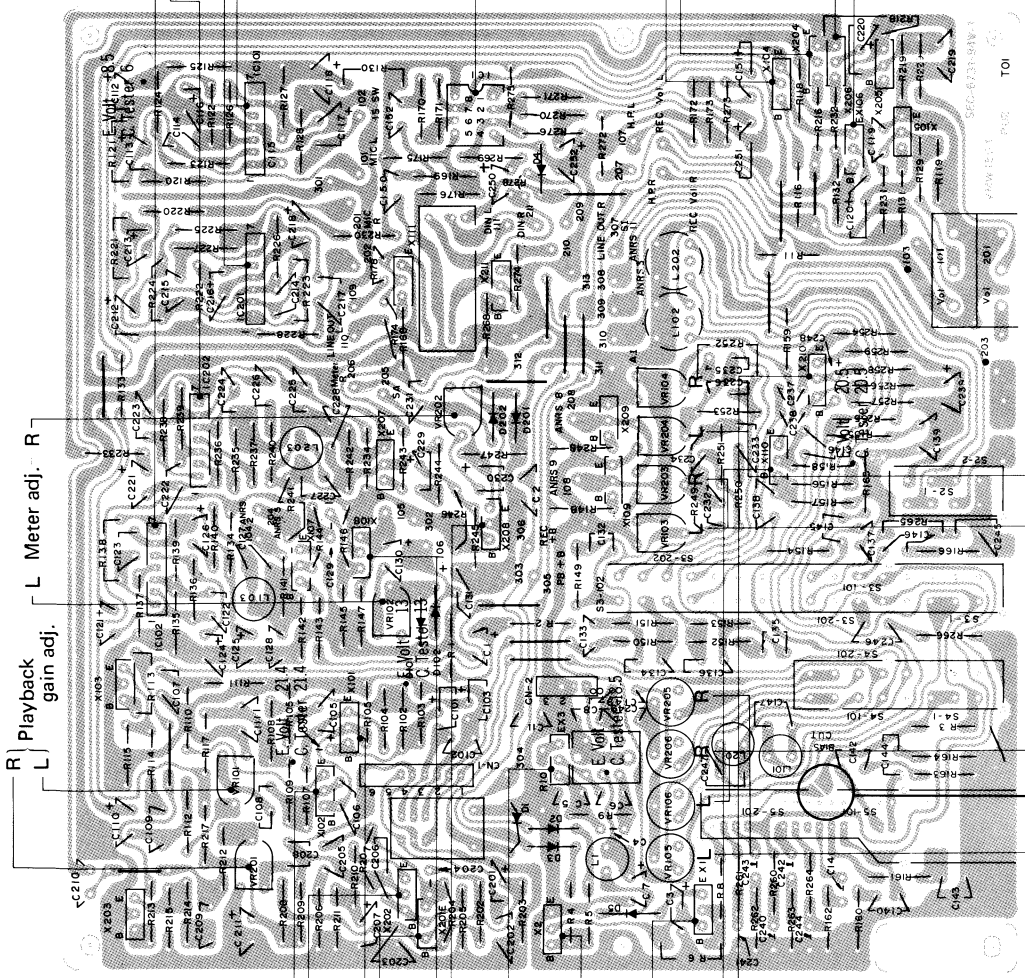

		E Volt	C. Tester
X102 X202	B	2.3	1.8
	C (Bias)	7.5	7.4
	E (Collector)	1.7	1.7
	E (Emitter)	4.6	3.4
X101 X201	B	2.3	1.8
	C	5.2	5.2
	E	10.5	9.1
X108 X208	B	21.7	21.7
	C	9.9	10.0
	E	−0.06	−0.06
X3	B	17.9	17.9
	C	0.22	0.22
	E		
X2	B	19.3 0	19.3 0
	C	0	0
	E		
X1	B	0	0
	C	19.5 20.3	19.5 20.3
	E		
X110 X210	B	1.5	0.8
	C	8	7.2
	E	0.88	0.9

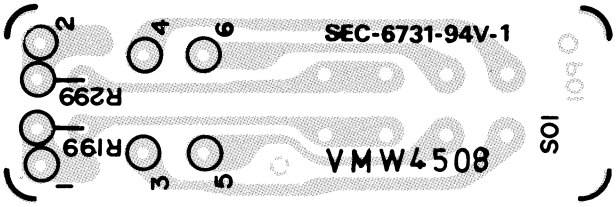

Main Amp. P.W. Board Parts List

⚠ parts are safety assurance parts. When replacing those parts, make sure to use the specified one.

Ref. No.	Parts No.	Parts Name	Remarks	Q'ty
	VMW1503-002	P.W. Board	No supply as parts ass'y	
R104, 204, 136, 236	QRD141K-224	C. Resistor	220 kΩ ¼ W	4
R106, 206, 172, 272	" -151	"	150 Ω "	4
R107, 207	" -154	"	150 kΩ "	2
R108,208,118,218,128,228, 142,242,146,246, 1	" -104	"	100 kΩ "	11
R109, 209, 129, 229	" -153	"	15 kΩ "	4
R110, 210, 120, 220	" -680	"	68 Ω "	4
R111,211,133,233,140,240	" -182	"	1.8 kΩ "	6
R112,212,126,226,158,258, 173,273	" -223	"	22 kΩ "	8
R113,213,131,231,141,241, 169,269,170,270, 2	" -103	"	10 kΩ "	11
R114,214,160,260,163,263	" -391	"	390 Ω "	6
R115,215,122,222,165,265	" -271	"	270 Ω "	6
R116,216,132,232,138,238	" -394	"	390 kΩ "	6
R119, 219	" -273	"	27 kΩ "	2
R125, 225	" -274	"	270 kΩ "	2
R127,227,143,243,148,248	" -562	"	5.6 kΩ "	6
R135, 235	" -221	"	220 Ω "	2
R137, 237	" -181	"	180 Ω "	2
R139, 239	" -183	"	18 kΩ "	2
R144,244,150,250,168,268, 4, 5	" -472	"	4.7 kΩ "	8
R145, 245, 9	" -683	"	68 kΩ "	3
R147, 247, 274	" -332	"	3.3 kΩ "	3
R149,249,153,253	" -393	"	39 kΩ "	4
R151, 251	" -473	"	47 kΩ "	2
R152, 252	" -154	"	150 kΩ "	2
R154, 254	" -333	"	33 kΩ "	2
R156, 256	" -684	"	680 kΩ "	2
R157, 257	" -563	"	56 kΩ "	2
R159, 259, 6	" -152	"	1.5 kΩ "	3
R164, 264	" -331	"	330 Ω "	2
R176, 276, 175, 275	" -124	"	120 kΩ "	4
R155, 255	" -182	"	1.8 kΩ "	2
	QWY123-022	Bus Wire		14
R161, 261	QRD142K-561	C. Resistor	560 Ω ¼ W	2
R162, 262	" -471	"	470 Ω "	2
R174	QRD143K-332	"	3.3 kΩ "	1
R178, 278	" -101	"	100 Ω "	2
R3	QRD146K-820	"	82 Ω " ⚠	1
R8	" -101	"	100 Ω " ⚠	1
R10	" -100	"	10 Ω " ⚠	1

Ref. No.	Parts No.	Parts Name	Remarks			Q'ty
R117, 217	" -221	"	220 Ω	"	⚠	2
R130, 230, 134, 234	" -271	"	270 Ω	"	⚠	4
R11	QRD121K-122	"	1.2 kΩ	½ W		1
R102, 202	QRZ0019-184	"	180 kΩ			2
R103, 203	" -104	"	100 kΩ			2
R105, 205	" -473	"	47 kΩ			2
R121, 221	" -124	"	120 kΩ			2
R123, 223	" -224	"	220 kΩ			2
R124, 224	" -154	"	150 kΩ			2
C107,207,116,216	QEW41AA-107	E. Capacitor	100 μF	10 V		4
C108,208,117,217,120,220, 126,226,138,238,148,248, 148,248, 7	QEW41EA-335	"	3.3 μF	25 V		13
C129, 229	QEW41EA-105	E. Capacitor	1 μF	25 V		2
C130, 230	" -475	"	4.7 μF	"		2
C131, 231	QEW41CA-476	"	47 μF	16 V		2
C150, 250	QEC81HM-224	"	0.22 μF	50 V		2
C157, 251, 3	QEW41EA-336	"	33 μF	25 V		3
C152, 252	QEW41CA-336	"	33 μF	16 V		2
C102, 202	QCS11HK-391	Fixed C. Capacitor	390 pF	50 V		2
C104, 204, 122, 222	" -271	"	270 pF	"		4
C106, 206	" -100	"	10 pF	"		2
C114, 214	" -271	"	270 pF	"		2
C115, 215, 123, 223	" -391	"	390 pF	"		4
C132, 232	" -561	"	560 pF	"		2
C147, 247	" -151	"	150 pF	"		2
C2	QFM41HK-182	Mylar Capacitor	0.0018 μF	"		1
C133, 233, 141, 241	" -272	"	0.0027 μF	"		4
C135, 235	" -102	"	0.001 μF	"		2
C136, 236, 145, 245	" -122	"	0.0012 μF	"		4
C137, 237, 11	" -683	"	0.068 μF	"		3
C140, 240	" -562	"	0.0056 μF	"		2
C142, 242	" -682	"	0.0068 μF	"		2
C143, 243	" -472	"	0.0047 μF	"		2
C144, 244	" -822	"	0.0082 μF	"		2
C4, 5	" -103	"	0.01 μF	"		2
C111,211,125,225,139, 239,118,218	QEW41EA-476	E. Capacitor	47 μF	25 V		8
C124, 224	QEW40JA-227	"	220 μF	6.3 V		2
C101, 201	QEE41EM-475	Tantal E. Capacitor	4.7 μF	25 V		2
C103, 203	QEB41EM-336	Low Leak E. Capacitor	33 μF	"		2
C105, 205	" -476	"	47 μF	"		2
C112, 212	" -106	"	10 μF	"		2
C113,213,121,221,110,210	" -335	"	3.3 μF	"		6
C109, 209	QFM41HJ-154	Mylar Capacitor	0.15 μF	50 V		2
C149, 249	QFS42BK-471	Poly. Capacitor	470 pF			2
C8	" -821	"	820 pF			1
C6	QFZ0001-392	"	0.0039 μF			1
VR101,201,103,203,104, 204	QVP8A0B-024	S.F. Resistor	20 kΩ			6
VR102, 202	" -023	"	2 kΩ			2
VR105, 205	QVP4A0B-224	"	220 kΩ			2
VR106, 206	" -104	"	100 kΩ			2
L101, 201	TAC000324-01	Inductor	18 mH			2
L1	" -03	"	1 mH			1

Ref. No.	Parts No.	Parts Name	Remarks	Q'ty
L102, 202	TAC000320-02	"	6.8 mH	2
X101, 201	2SA721(TU)	Si. Transistor		2
X102,202,108,208	2SC1327(TU)	"		4
X103,203,104,204,105,205, 106,206,107,207,109,209, 111,211, 2	2SC828(RS)	"		15
X1	2SC1383(RS)	"		1
X3	2SC1384(S)	"		1
IC101, 201	UPC1024HV	I.C.		2
IC102, 202	UPC1024H	"		2
IC1	UPC4558C	"		1
	TAB345518-01	O.S.C. Coil		1
	T31547-002	Relay		1
	*VSK2D24-211	Reed Relay		1
D101, 201, 102, 202	0A90	Ge. Diode		4
D1–4	1S2076A	Si. Diode		4
D5	10E1	"		1
	QVE5A3A-054V	V. Resistor	Rec. Vol.	1
	QSR4645-200	Rotary S. Switch	Rec. EQ.	1
	QSL2312-002	Lever Switch	ANRS	1
	QSL4312-002	"	Bias	1
	QSL8312-003	"	E.Q.	1
	QMV5005-006	Plug Ass'y		1
	QMV5005-003	"		1
	E43727-002	Tab		35
	VKL3125-001	Control Bracket		1
	QVD2A2A-024V	V. Resistor	Output Level	1
	QSL2212-007	Lever Switch	Input Select SW	1
	VMW4508-001	P.W. Board		1
R199, 299	QRD143K-823	C. Resistor	83 kΩ ¼ W	2
	LPSP3006ZS	Screw	for Switch	2

Spectro-peak Level P.W Board

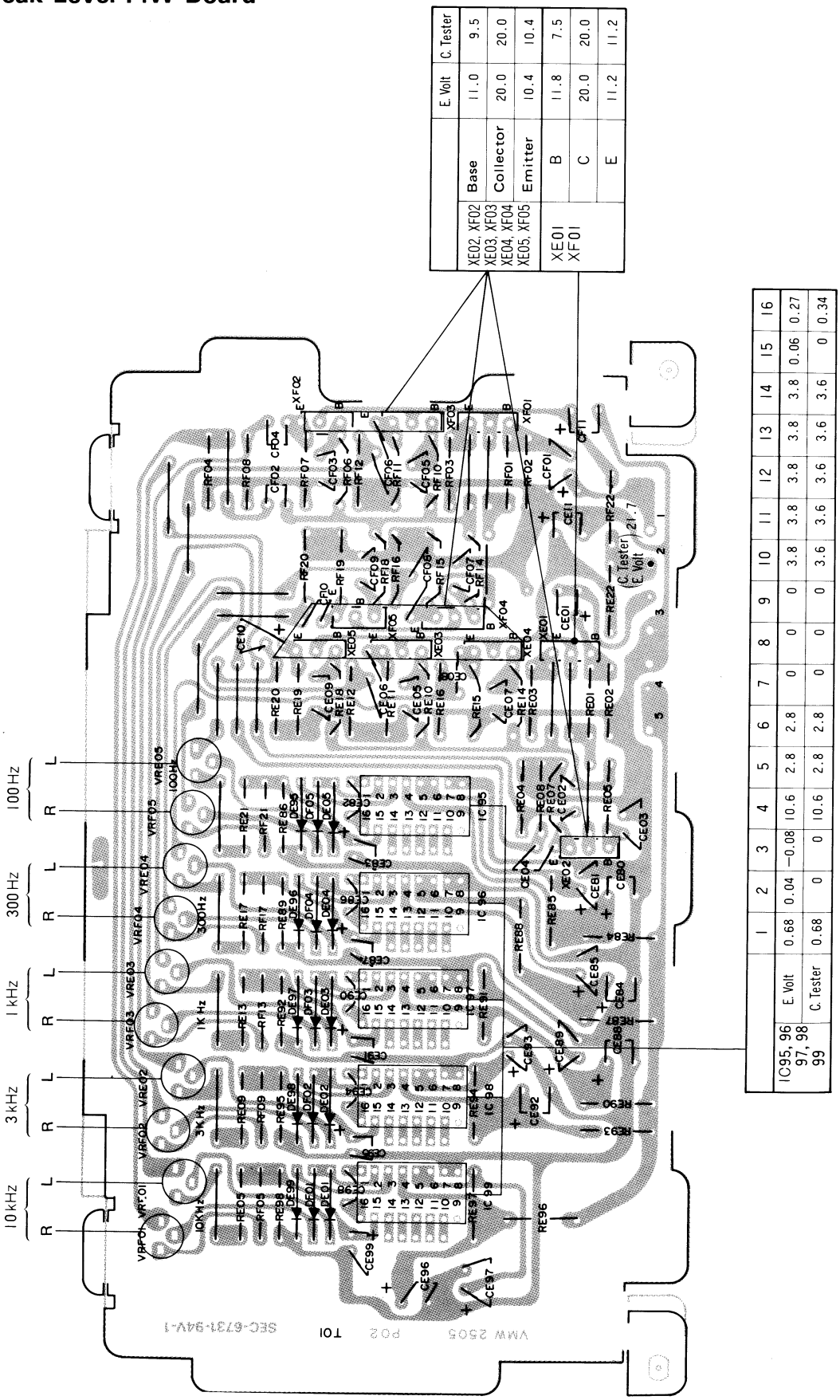

		E. Volt	C. Tester
XE02, XF02 XE03, XF03 XE04, XF04 XE05, XF05	Base	11.0	9.5
	Collector	20.0	20.0
	Emitter	10.4	10.4
XE01 XF01	B	11.8	7.5
	C	20.0	20.0
	E	11.2	11.2

IC95, 96, 97, 98, 99		1	2	3	4	5	6	7	8	9	10	11	12	13	14	15	16
	E. Volt	0.68	0.04	−0.08	10.6	2.8	2.8	0	0	0	3.8	3.8	3.8	3.8	3.8	0.06	0.27
	C. Tester	0.68	0	0	10.6	2.8	2.8	0	0	0	3.6	3.6	3.6	3.6	3.6	0	0.34

Spectro-Peak Level P.W. Board Parts List

⚠ parts are safety assurance parts.
When replacing those parts, make sure to use the specified one.

Ref. No.	Parts No.	Parts Name	Remarks	Q'ty
	VMW2505-002	P.W. Board	No supply as parts ass'y	
RE01, F01	QRD141K-224	C. Resistor	220 kΩ ¼ W	2
RE02, F02	" -394	"	390 kΩ "	2
RE03, F03	" -103	"	10 kΩ "	2
RE04,F04,E08,F08,E12, F12,E16,F16,E20,F20	" -123	"	12 kΩ "	10
RE05,F05,E06,F06,E09, F09,E10,F10,E13,F13, E14,F14,E17,F17,E18, F18,E21,F21	" -273	"	27 kΩ "	18
RE07,F07,E11,F11,E15, F15,E19,F19	" -682	"	6.8 kΩ "	8
RE86,E89,E95,E92,E98	" -153	"	15 kΩ "	5
RE85,E88,E91,E94,E97	" -102	"	1 kΩ "	5
	QWY123-022	Bus Wire		20
RE22,F22	QRD146K-331	C. Resistor	330 Ω ¼ W ⚠	2
RE84,E87,E90,E93,E96	" -151	"	150 Ω " ⚠	5
CE01, F01	QEW41EA-475	E. Capacitor	4.7 μF 25 V	2
CE11, F11	" -107	"	100 μF "	2
CE83,E87,E91,E95,E99	QEW41CA-336	"	33 μF 16 V	5
CE81,E85,E89,E93,E97	QEW41EA-105	"	1 μF 25 V	5
CE80,E84,E88,E92,E96	QEW41CA-107	"	100 μF 16 V	5
CE79	QEW41EA-106	"	10 μF 25 V	1
CE10, F10	QEB41HM-334M	L.L.C.E. Capacitor	0.33 μF 50 V	2
CE02, F02	QFM41HK-332	Mylar Capacitor	0.0033 μF "	2
CE03, F03	" -102	"	0.001 μF "	2
CE04, F04, E07, F07	" -103	"	0.01 μF "	4
CE05, F05	" -332	"	0.0033 μF "	2
CE06, F06, E09, F09	" -333	"	0.033 μF "	4
CE08, F08	" -104	"	0.1 μF "	2
CE12, F12	" -562	"	0.0056 μF "	2
CE82,E86,E90,E94,E98	QCS11HK-470	Fixed C. Capacitor	47 pF "	5
VRE01–05, F01–05	QVP6A0B-024	S.F. Resistor	20 kΩ	10
DE01–05, F01–05, F95–99	1S2075K-23	Si. Diode		15
XE01–05, F01–05	2SC828(RS)	Si. Transistor		10
ICE95–99	LB1415S	I.C.		5
	E43727-002	Tab		5
	QMV5005-005	Plug Ass'y		5
	TAH000459-01	Mark (1)	IC95 CN-1	2
	" -02	" (2)	IC96 CN-2	2
	" -09	" (3)	IC97 CN-3	2
	" -10	" (4)	IC98 CN-4	2
	" -11	" (5)	IC99 CN-5	2

Control P.W Board

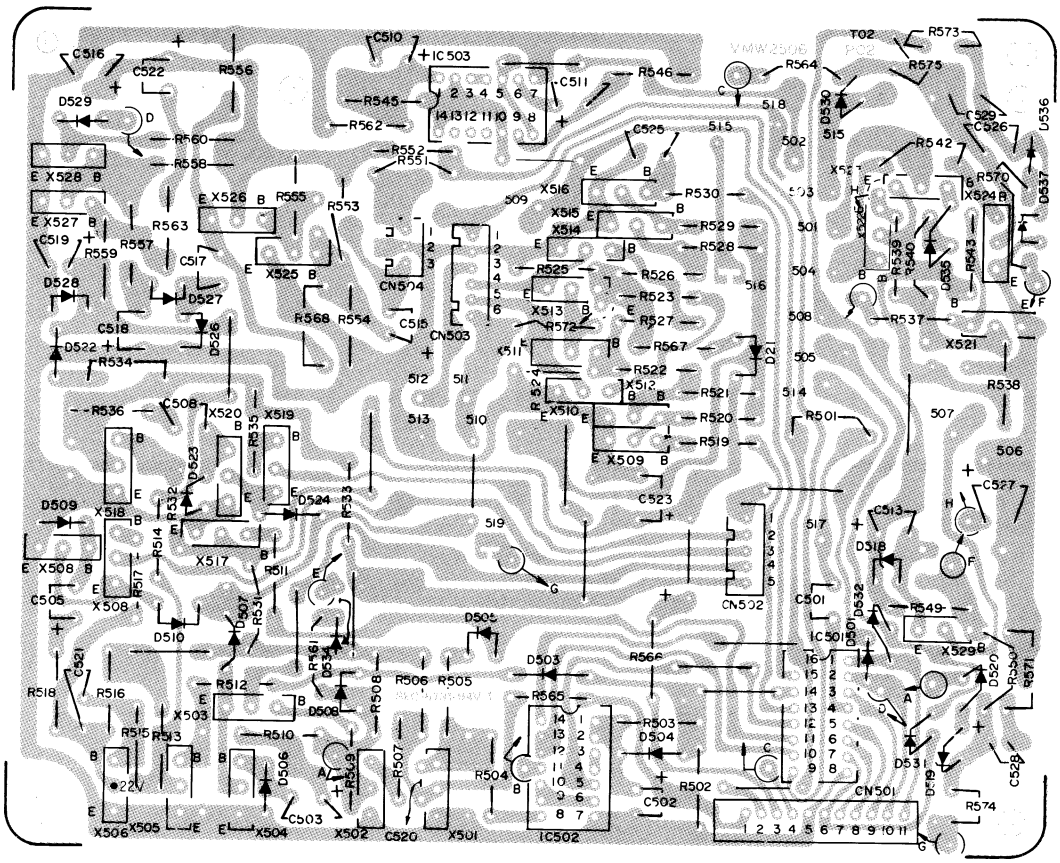

		STOP	REWIND	FF	PLAY	PAUSE	REC	REC-PAUSE
X501	B	0.085	0.085	0.085	0.78	0.76	0.76	0.76
	C	4.1	4.1	4.1	0.1	0.13	0.1	0.13
	E	0	0	0	0	0	0	0
X502	B	0.82	0.82	0.82	0.1	0.13	0.1	0.13
	C	0.15	0.15	0.15	19.5	18.5	19.5	18.5
	E	0	0	0	0	0	0	0
X503	B	0.15	0.15	0.15	16.5	16.5	16.5	16.5
	C	31	31	31	16	16	16	16
	E	0.05	0.05	0.05	16	16	16	16
X504	B	0	0	0	0	0	0	0
	C	0	0	0	16	16	16	16
	E	0	0	0	0	0	0	0
X505	B	0.8	0.1	0.1	0	0	0	0
	C	8.2	0.1	0.1	0.04	0.04	0.04	0.04
	E	0	0	0	0	0	0	0
X506	B	0.8	0	0	0	0	0	0
	C	0.1	22	22	22	22	22	22
	E	0	0	0	0	0	0	0
X507	B	0.12	16.5	16.5	16.5	16.5	16.5	16.5
	C	31	16	16	16	16	16	16
	E	0	16	16	16	16	16	16
X508	B	0	0	0	0	0	0	0
	C	0	16	16	16	16	16	16
	E	0	0	0	0	0	0	0
X509	B	0.15	00.7	0.14	0.14	0.14	0.14	0.14
	C	0.77	0	0.77	0.77	0.77	0.77	0.77
	E	0	0	0	0	0	0	0

		STOP	REWIND	FF	PLAY	PAUSE	REC	REC-PAUSE
X510	B	0.77	0	0.77	0.77	0.77	0.77	0.77
	C	0	17	0	0	0	0	0
	E	0	0	0	0	0	0	0
X511	B	0	10.8	0	0	0	0	0
	C	15	15	15	15	15	15	15
	E	0	10.5	0	0	0	0	0
X512	B	0	0	0.74	0.72	0.68	0.64	0.58
	C	0	10.5	0	0	0	0	0
	E	0	0	0	0	0	0	0
X513	B	0	0	11	6.2	1.9	6.4	1.9
	C	15	15	15	15	15	15	15
	E	0	0	10.4	5.8	1.3	5.8	1.3
X514	B	0	0.75	0	0	0	0	0
	C	0	0	10.4	5.8	1.3	5.8	1.3
	E	0	0	0	0	0	0	0
X515	B	0.77	0.77	0	0.78	0.78	0.78	0.78
	C	0	0	17	0.08	0.08	0.08	0.08
	E	0	0	0	0	0	0	0
X516	B	0.14	0.14	0.7	0.14	0.14	0.14	0.14
	C	0.77	0.77	0	0.78	0.78	0.78	0.78
	E	0	0	0	0	0	0	0
X517	B	0.15	0.15	0.15	0.15	0.78	0.15	0.78
	C	16	16	16	16	0.13	16	0.13
	E	0	0	0	0	0	0	0
X518	B	0.78	0.78	0.78	0.78	0.13	0.78	0.13
	C	0	0	0	0	17.6	0	17.6
	E	0	0	0	0	0	0	0

		STOP	REWIND	FF	PLAY	PAUSE	REC	REC-PAUSE
X519	B	0	0	0	0	16.5	0	16.5
	C	31	31	31	31	16	31	16
	E	0	0	0	0	16	0	16
X520	B		⅄					
	C	0	0	0	0	16	0	16
	E	0	0	0	0	0	0	0
X521	B				0.76		0.38	
	C				0		19.5	
	E				0		0	
X522	B				0		19	
	C				20		19.6	
	E				0		18.4	
X523	B				19.3			
	C				20			
	E				20			
X524	B				0		0.76	
	C				3.8		0	
	E				0		0	
X525	B				0.65			
	C				5			
	E				0			
X526	B				5			
	C				15.5			
	E				4.4			
X529	B				16.5			
	C				17.2			
	E				17.2			
IC501	1	5.2	5.2	5.2	⅄	5.2	5.2	5.2
	2	⅄	5.2	5.2	5.2	5.2	5.2	5.2
	3	5.2	5.2	⅄	5.2	5.2	5.2	5.2
	4	5.2	5.2	5.2	5.2	5.2	5.2	5.2
	5	5.2	⅄	5.2	5.2	5.2	5.2	5.2
	6	5.2	5.2	5.2	5.2	⅄	5.2	⅄
	7	5.2	5.2	5.2	5.2	5.2	⅄	⅄
	8	0	0	0	0	0	0	0
	9	5.2	5.2	5.2	5.2	5.2	5.2	5.2

		STOP	REWIND	FF	PLAY	PAUSE	REC	REC-PAUSE
	10	0.14	0.14	0.14	0.14	0.14	5.2	5.2
	11	0.14				3.2		3.2
	12	0.14			5.2			
	13	0.84	4.4					
	14	0.15	2.35	2.35				
	15	0.14		4.5				
	16	5.2	5.2	5.2	5.2	5.2	5.2	5.2
IC502	1	1.05	2.35	2.35	1.05	1.05	1.05	1.05
	2	1.05	2.35	2.35	1.05	1.05	1.05	1.05
	3	3.5	2.09	0.09	3.5	3.5	3.5	3.5
	4	3.5	2.09	0.09	3.5	3.5	3.5	3.5
	5	0.14	0.14	0.14	5.2	0.14	0.14	0.14
	6	4	4	4	0.1	4	0.1	4
	7	0	0	0	0	0	0	0
	8	0.09	0.09	0.09	3.7	0.1	3.7	0.1
	9	4	4	4	0.1	4	0.1	4
	10	4	4	4	0.1	4	0.1	4
	11	3.7	3.7	3.7	3.7	3.7	0.1	0.1
	12	0.14	0.14	0.14	0.14	0.14	0.52	0.52
	13	0.14	0.14	0.14	0.14	0.14	0.52	0.52
	14	5.2	5.2	5.2	5.2	5.2	5.2	5.2
IC503	1				1.5			
	2				5.2			
	3				0.1			
	4				0.1			
	5				5.2			
	6				4.4			
	7				0			
	8				5.2			
	9				0.4			
	10				5.2			
	11							
	12							
	13							
	14				5.2			

Control P.W. Board Parts List

⚠ parts are safety assurance parts.
When replacing those parts, make sure to use the specified one.

Ref. No.	Parts No.	Parts Name	Remarks	Q'ty
	VMW2506-002	P.W. Board	No supply as parts ass'y	
R501	QRD141K-124	C. Resistor	120 kΩ ¼ W	1
R502, 503	" -152	"	1.5 kΩ "	1
R504,505,511,533,556,570	" -332	"	3.3 kΩ "	6
R506	" -183	"	18 kΩ "	1
R507,523,527,537,538	" -222	"	2.2 kΩ "	5
R509,517,535	" -821	"	820 Ω "	3
R510, 518, 536	" -561	"	560 Ω "	3
R512	" -333	"	33 kΩ "	1
R513	" -123	"	12 kΩ "	1
R514, 534, 557, 559	" -472	"	4.7 kΩ "	4
R515, 531, 532, 562	" -682	"	6.8 kΩ "	4
R579, 530	" -822	"	8.2 kΩ "	2
R520, 524, 525, 529	" -153	"	15 kΩ "	4
R522, 526, 571	" -102	"	1 kΩ "	3
R539, 547, 550	" -562	"	5.6 kΩ "	3
R540	" -223	"	22 kΩ "	1
R542, 558	" -393	"	39 kΩ "	2
R543	" -154	"	150 kΩ "	1
R545, 555	" -563	"	56 kΩ "	2

Ref. No.	Parts No.	Parts Name	Remarks		Q'ty
R546	" -471	"	470 Ω	"	1
R549	" -123	"	12 kΩ	"	1
R560	" -103	"	10 kΩ	"	1
R561	" -122	"	1.2 kΩ	"	1
R564	" -331	"	330 Ω	"	1
R565, 566	" -271	"	270 Ω	"	2
R567	" -101	"	100 Ω	"	1
R568	" -684	"	680 kΩ	"	1
	QWY123-022	Bus Wire			16
R516	QRG016J-122	O.M.F. Resistor	1.2 kΩ	⚠	1
R521, 528	QRG019J-222	"	2.2 kΩ		2
R508	QRG016J-681	"	680 Ω	⚠	1
R551	QRD121K-122	C. Resistor	1.2 kΩ	½ W	1
R552	QRD146K-222	"	2.2 kΩ	"	1
R544	" -101	"	100 Ω	"	1
R572	QRD146K-220	"	22 Ω	¼ W ⚠	1
R574	QRD143K-102	"	1 kΩ	¼ W	1
R575	QRD143K-393	"	39 kΩ	"	1
R573	" -104	"	100 kΩ	"	1
C502, 510	QEW40JA-477	E. Capacitor	470 μF	6.3 V	2
C503, 508	QEW41EA-476	"	47 μF	25 V	2
C505	" -106	"	10 μF	"	1
C511	QEW41AA-336N	"	33 μF	6.3 V	1
C512	QEW41EA-107	"	100 μF	25 V	1
C513, 518	QEW41AA-107	"	100 μF	10 V	2
C515	QEW41CA-476	"	47 μF	16 V	1
C516, 519	" -227	"	220 μF	"	2
C517	" -107	"	100 μF	"	1
C523	QEW41EA-477	"	470 μF	25 V	1
C526, 529	QEN41EA-335N	"	3.3 μF	"	2
C527	QEW41HA-105N	"	1 μF	50 V	1
C528	QEW41EA-106	"	10 μF	25 V	1
C501	QFM41HK-683	Mylar Capacitor	0.068 μF	50 V	1
C520, 521	QCS11HK-471	Fixed C. Capacitor	470 pF	"	2
IC501	M54410P	I.C.			1
IC502, 503	TD3400AP	"			2
X501,502,505,506,509,510, 515,516,517,518,521,522, 524—528	2SC828(RS)	Si. Transistor			17
X503	2SC1847(R)	"			1
X504, 508, 520	2SC1383(S)	"			3
X507, 512, 514, 519	2SC1384(S)	"			4
X511, 513	2SC1847(QR)	"			2
X523, 529	2SA564(RS)	"			2
D503—506, 508,509, 520—523, 528, 534, 537	1S2076A	Si. Diode			13
D501,526,527,529—532, 535, 536	1S188FM	Ge. Diode			9
D507, 510, 524	10E1	Si. Diode			3
D518	RD4.3EC	Zener Diode			1
D519	RD10E	"			1
	QMV5005-006	Plug Ass'y			1
	QMV5005-005	"			1
	QMV5005-003	"			1
	QMV5004-011	"			1
	FG9010-001	Tab			2
	E43727-002	"			17

Power Supply P.W Board

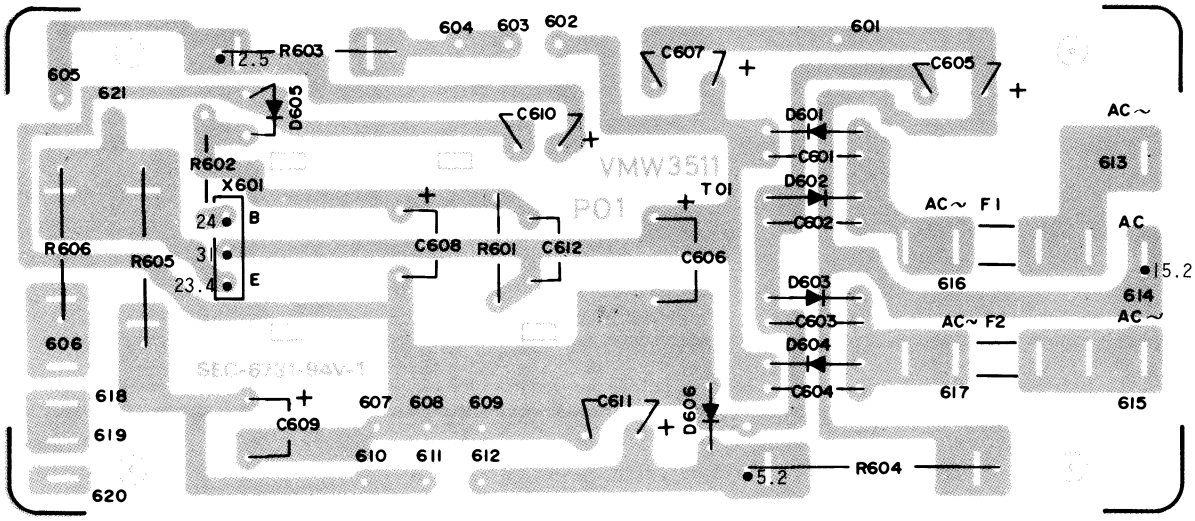

Power Supply P.W. Board Parts List

⚠ parts are safety assurance parts.
When replacing those parts, make sure to use the specified one.

Ref. No.	Parts No.	Parts Name	Remarks	Q'ty
	VMW3511-001	P.W. Board	No supply as parts ass'y ⚠	1
C605, 607, 609	QEW41EA-108	E. Capacitor	1000 μF 25 V ⚠	3
C606	QEW71HH-228M	"	2200 μF 50 V ⚠	1
C608	QEW41EA-337	"	330 μF 25 V ⚠	1
C610	QEW41CA-477	"	470 μF 16 V ⚠	1
C611	QEW41AA-108	"	1000 μF 10 V ⚠	1
C601–604	QCF12HP-103	Fixed C. Capacitor	0.01 μF 50 V ⚠	4
C612	QCS11HK-101	"	100 pF " ⚠	1
R601	QRD146K-102	C. Resistor	1 kΩ ¼ W ⚠	1
R602	" -3R3	"	3.3 Ω " ⚠	1
R603	QRX026J-220	O.M.F. Resistor	22 Ω ⚠	1
R604	QRG036J-560	"	56 Ω ⚠	1
R605	QRX026J-8R2	"	8.2 Ω ⚠	1
	TAZ000509-02	Fuse Seal	1 AT	2
	TAZ001331-02BS	Fuse Holder	KD-85B ⚠	4
	TAZ001331-02	"	KD-85A/E ⚠	4
	QMF51A2-1R0LBS	Fuse	1 AT – KD-85B ⚠	2
	QMF51A2-1R0	"	1 AT – KD-85A/E ⚠	2
	E40130-001	Tab		6
	E43727-002	"		10
	A43596-001	"		8
	FG9010-001	"	⚠	1
X601	2SC1162WT(BC)	Si. Transistor	⚠	1
D601–604	10E1	Si. Diode	⚠	4
D605	RD24E(1)	Zener Diode	⚠	1
D606	RD5.1FB	"		1
	VMW4514-001	P.W. Board	for X601	1
	VKL4264-001	Radiation Plate	"	1
	LPSP3008ZS	Screw	"	1
	LPSP2606Z	"	"	1

Super ANRS P.W Board

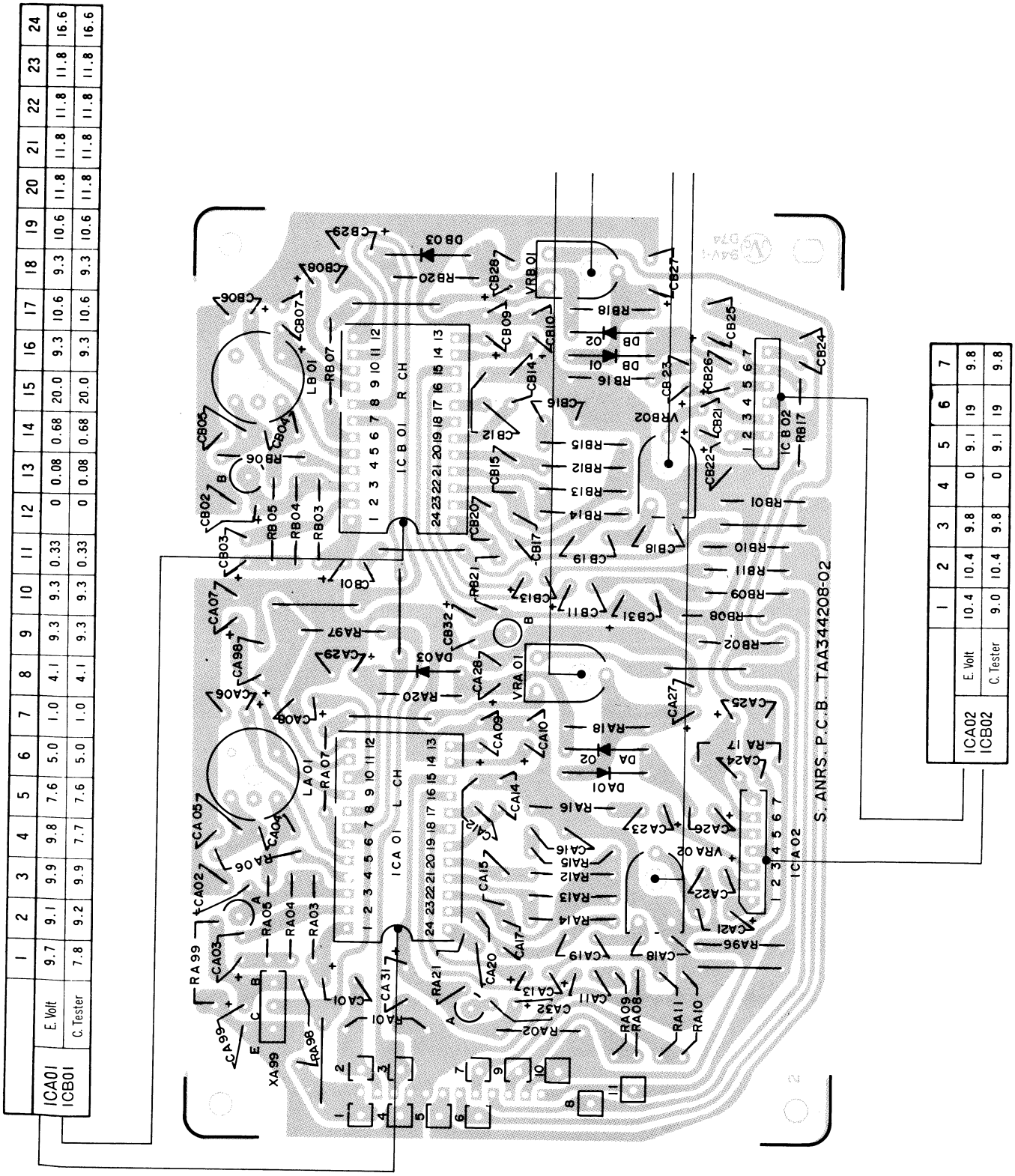

		1	2	3	4	5	6	7	8	9	10	11	12	13	14	15	16	17	18	19	20	21	22	23	24
ICA01 ICB01	E. Volt	9.7	9.1	9.9	9.8	7.6	5.0	1.0	4.1	9.3	9.3	0.33	0	0.08	0.68	20.0	9.3	10.6	9.3	10.6	11.8	11.8	11.8	11.8	16.6
	C. Tester	7.8	9.2	9.9	7.7	7.6	5.0	1.0	4.1	9.3	9.3	0.33	0	0.08	0.68	20.0	9.3	10.6	9.3	10.6	11.8	11.8	11.8	11.8	16.6

		1	2	3	4	5	6	7
ICA02 ICB02	E. Volt	10.4	10.4	9.8	0	9.1	19	9.8
	C. Tester	9.0	10.4	9.8	0	9.1	19	9.8

No. 4165

Super ANRS P.W. Board Parts List

⚠ parts are safety assurance parts.
When replacing those parts, make sure to use the specified one.

Ref. No.	Parts No.	Parts Name	Remarks	Q'ty
	TAA344208-02	P.W. Board	No supply as parts ass'y	1
RA03,B03,A04,B04,A96	QRD141K-473	C. Resistor	47 kΩ ¼ W	5
RA05, B05	" -562	"	5.6 kΩ "	2
RA06, B06	" -102	"	1 kΩ "	2
RA07, B07	" -222	"	2.2 kΩ "	2
RA08, B08	" -153	"	15 kΩ "	2
RA09, B09	" -472	"	4.7 kΩ "	2
RA10, B10	" -333	"	33 kΩ "	2
RA11, B11	" -221	"	220 Ω "	2
RA12, B12, A13, B13	" -272	"	2.7 kΩ "	4
RA14, B14	" -183	"	18 kΩ "	2
RA15, B15, A16, B16	" -680	"	68 Ω "	4
RA18, B18	" -223	"	22 kΩ "	2
RA20, B20	" -103	"	10 kΩ "	2
RA97	" -471	"	470 Ω "	1
	QWY123-022	Bus Wire		8
RA21, B21	QRD143K-104	C. Resistor	100 kΩ ¼ W	2
RA02, B02	QRD146K-101	"	100 Ω " ⚠	2
RA17, B17	" -681	"	680 Ω " ⚠	2
CA01,B01, A26,B26	QEW41EA-105	E. Capacitor	1 μF 25 V	4
CA02,B02, A07,B07, A08,B08	QEW41CA-476	"	47 μF 16 V	6
CA03,B03,A11,B11,A13, B13	QEW41EA-475	"	4.7 μF 25 V	6
CA06,B06,A09,B09,A10, B10,A27,B27	QEW41CA-336	"	33 μF 16 V	8
CA22,B22,A23,B23,A32, B32	QEW41EA-106	"	10 μF 25 V	6
CA25, B25	" -476	"	47 μF "	2
CA28, B28	QEW41EA-335	"	3.3 μF "	2
CA31, B31	" -107	"	100 μF "	2
CA98	QEW40JA-227	"	220 μF 6.3 V	1
CA21,B21,A29,B29	QEB41HM-334M	L.L.E. Capacitor	0.33 μF 50 V	4
CA04, B04	QCS11HK-151	Fixed C. Capacitor	150 pF "	2
CA05, B05	QCY41HK-102	"	0.001 μF "	2
CA12, B12, A14, B14	QCS11HK-101	"	100 pF "	4
CA18, B18	QCS11HK-391	"	390 pF "	2
CA19, B19	" -471	"	470 pF "	2
CA20, B20	" -331	"	330 pF "	2
CA15, B15	QFM41HJ-272	Mylar Capacitor	0.0027 μF "	2
CA16, B16	" -273	"	0.027 μF "	2
CA24, B24	QFM41HK-102	"	0.001 μF "	2
CA17, B17	" -682	"	0.0068 μF "	2
VRA01, B01	QVP8A0B-023	S.F. Resistor	2 kΩ "	2
VRA02, B02	" -024	"	20 kΩ	2
LA01, B01	TAC000320-01	V. Inductor		2
DA01, B01, A02, B02	1S188FM	Ge. Diode		4
DA03, B03	1S2076A	Si. Diode		2
ICA02, B02	TA7140P-BC	I.C.		2
ICA01, B01	TAT000351-01	"		2
	E43727-002	Tab		11

Other P.W. Board

Pin Jack

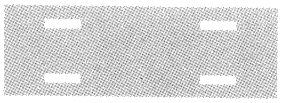

Mic Jack

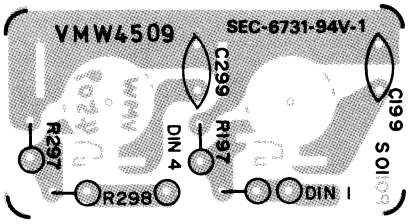

Spectro-Peak Indicator

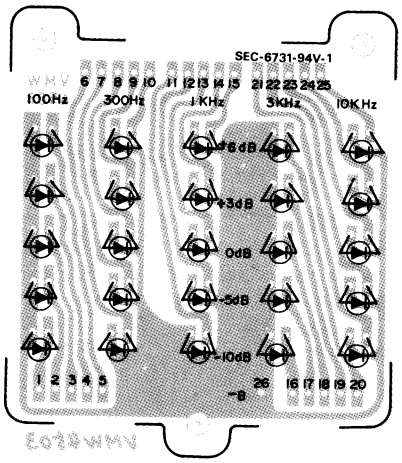

ANRS Indicator

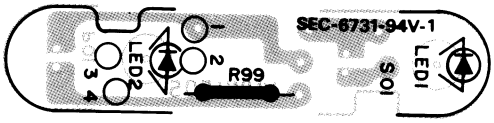

Switches

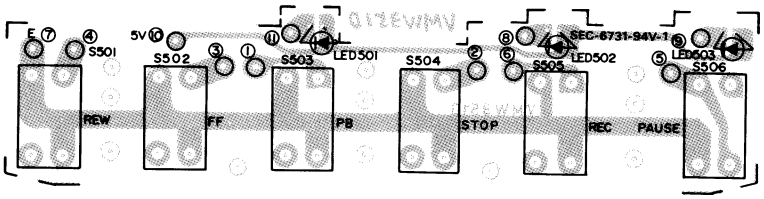

Hall Element

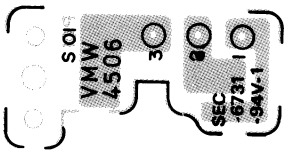

Other P.W. Board Parts List

Ref. No.	Parts No.	Parts Name	Remarks	Q'ty
(PIN jacks)				
	TAA345532-01	Circuit Board	for PIN jacks	1
(MIC jacks)				
	VMW4509-001	P.W. Board	for MIC jacks	1
R199, 299	QRD183K-222	C. Resistor	2.2 kΩ	2
R198, 298	" -822	"	8.2 kΩ	2
C198, 298	QCY41HK-681	Fixed C. Capacitor	680 pF	2
	VMJ5003-001	Jack Board Ass'y		1
(ANRS Indicators)				
	VMW4505-001	P.W. Board		1
LED1, 2	TLG102	L.E.D.		2
R99	QRD121K-122	C. Resistor	2.2 kΩ ½ W	1
	Y40215-001	Spacer	for L.E.D.	2
(Spectro-Peak Level Indicators)				
	VMW4503-001	P.W. Board		1
H6	Y40215-001	Spacer	for L.E.D.	25
	TLR102	L.E.D.		25
(Switches)				
	VMW3510-001	P.W. Board		1
	QCF11HP-473	Fixed C.Capacitor	0.047 μF 50 V	3
	QSP0022-001	Touch Switch		6
	TLR102	L.E.D.		1
	TLG102	"		2
H9	VKZ4101-001	Spacer		3
	VYH4213-001	Insulator	for Spectro-Peak Holder	1
	VJD4147-001	Spectro-Peak Holder		1
(Hall Element)				
	VMW4506-001	P.W. Board		1
	VHE510	Hall Element		1

Mechanical Component Parts List

Ref. No.	Parts No.	Parts Name	Remarks	Q'ty
1	VKL2110-00A	Chassis Ass'y		1
2	VKS4114-001	Point Bracket		1
3	TGP344418-0B	Reel Disk Ass'y		1
4	TEP357437-01	Reel Stopper		2
5	TGP344420-0B	Reel Disk Ass'y		1
6	T45803-001	Felt		1
7	T47361-001	Back-Tension Base		1
8	VKL4260-00A	Idler Lever Ass'y		1
9	VKL4262-00A	Idler Arm Ass'y		1
10	T47372-002	Clutch Felt		1
11	TFW344527-01	Ilder Spring		1
12	VKR4106-00A	Idler Ass'y		1
13	VKZ4105-001	Sheet		1
14	m190-00A	DC Motor	for Reel Disk	1
15	T47374-004	Reel Motor Pulley		1
16	VKL4201-001	Motor Base		1
17	TDP344307-0B	DC Solenoid Ass'y	for Brake	1
18	T30155-001	Si. Diode		1
19	VKL4202-001	Brake Lever		1
20	VKL4203-001	Brake Bar		1
21	VKL4205-00A	Contact Bar Ass'y		1
22	VKW4113-001	Brake Spring		1
23	T44341-001	Rubber Tire		2
24	T43909-001	Metal		1
25	TEP344424-01	Cassette Guide		1
26	QSM1V11-104	Microswitch		1
27	VKL4206-001	Switch Bracket		1
28	VKS4115-001	REC Bracket		1
29	VKS4116-001	REC Safety Lever		1
30	VKH4144-001	Shaft	for REC	1
31	QSM1S01-015	Microswitch		1
32	VKS4117-001	SW Holder		1
33	VKS4118-001	SW Shaft		1
34	VKC6101-001T	Counter Ass'y		1
35	VKL4207-001	Counter Bracket		1
36	VKB3000-004H	Counter Belt		1
37	VKS4122-001	Reset Slide		1
38	VKL4209-00A	Arm Ass'y	for Slide Base	1
39	TDP344306-0B	DC Solenoid Ass'y	for Slide Base	1
40	T30155-001	Si. Diode		1
41	VKL4210-001	Connect Arm		1
42	VKH4147-001	Solenoid Pin		1
43	TDF344307-0B	DC Solenoid Ass'y	for Pause	1
44	T30155-001	Si. Diode		1
45	VKL4211-001	Pause Lever		1
46	VKH4138-001	Pause Collar		1
47	m1606-00A	DC Motor	for Capstan	1
48	TFH344448-01	Motor Pulley		1
49	TER357465-03	Cushion Rubber		3
50	VKZ4109-001	Motor Screw		3
51	TER313570-01	Motor Cushion		1
52	VKL3126-001	Motor Bracket		1
53	TFB344419-01	Rubber Stopper		1
54	VKF3103-00A	Capstan Metal		1
55	TEW344304-0A	Flywheel Ass'y		1

Ref. No.	Parts No.	Parts Name	Remarks	Q'ty
56	VKB3001-004H	Capstan Belt		1
57	VKL3128-001	Thrust Holder		1
58	TEP357456-01	Thrust Screw		1
59	TGB344309-0B	Slide Base Ass'y		1
60	TFW344458-01	Pinch Roller Spring		1
61	TFB344459-01	Push Arm		1
62	TGB344463-0A	Pinch Roller Bracket Ass'y		1
63	VKW4115-001	Wire (1)	for Slide Base	1
64	VKW4116-001	Wire (2)	for Pause	1
65	ZMM074301-0A	REC/PB Head Ass'y		1
66	VKH3001-001	Flange Collar	for R/P Head	2
67	SHSP2008N	Screw		3
68	THS000356-0A	Erase Head	D. Gape	1
69	VKH3000-010	Collar		1
70	VKZ4001-009	Wire Clamp		2
71	SPSX2008N	Screw		2
72	TER344523-01	Rubber Cushion		3
73	VKL3127-001	Holder Plate		1
74	VKS3105-001	Ball Holder (L)		1
75	VKL4212-001	Ball Actuator (L)		1
76	VKW4114-003	Actuator Spring (L)		1
77	VKH4148-001	Actuator Pin		1
78	T41615-007	Steel Ball		1
79	VKS3105-002	Ball Holder (R)		1
80	VKL4212-002	Ball Actuator (R)		1
81	VKW4114-004	Actuator Spring (R)		1
82	VKH4148-001	Actuator Pin		1
83	T41615-007	Steel Ball		1
84	VKL4213-001	Panel Plate		1
85	VKS4119-001	Indicator		1
86	VKZ4106-001	Cement Sheet		1
87	VKZ4107-001	Sheet	for Lamp	1
88	T47861-001	Pilot Lamp		1
89	TER344470-01	Lamp Rubber		1
90	VKY4117-001	Spring Plate		1
91	THC037417-02	Head Plate	(SA)	1
92	THS000489-2	Head Label	(2GAP)	1
94	T41479-00B	Terminal Board		1
95	VKZ4001-010	Wire Holder		1
96	TJN265559-04	Silencer	Brake Lever Spring	1
101	LPSP2604Z	Screw	Spring Plate x 4, Motor Base x 2	6
102	LPSP2605Z	"	Point Bracket x 2, Cassette Guide x 1, REC Bracket x 3, Switch Holder x 1, Counter x 2, Motor Bracket Rubber Stopper x 1, Capstan Metal x 3, Slide Base Ass'y x 4	17
103	LPSP2608Z	"	Terminal Board	2
104	LPSP3004ZS	"	Brake Solenoid	4
105	LPSP3006ZS	"	Slide Base Solenoid	3
106	DPSP2606Z	"	Metal	1
107	SPSP2003Z	"	Capstan Motor Pulley	1

Ref. No.	Parts No.	Parts Name	Remarks	Q'ty
108	SPSP2004Z	Screw	Reel Motor Pulley	1
109	SPSP2010N	"	Microswitch	1
110	SPSP2603Z	"	Motor Base	2
111	SPSP3012ZS	"		2
112	SSSP2604N	"	Ball Holder (L, R)	2
113	SSSP2606Z	"	Pause Lever	1
114	SSSP3006ZS	"	Counter Bracket	2
115	T30300-103	Spring		1
116	30301-135	"	Back-tension Spring	2
117	" -138	"	REC/PB Head, E. Head	2
118	" -137	"	Capstan Metal	1
119	VKW3000-005	"	REC	1
120	" -006	"	Pause	1
121	" -007	"	Slide Base	1
122	" -016	"	Brake Lever	1
123	VKW3001-004	"	Idler	1
124	" -005	"	REC/PB Head	2
125	Q03093-301	Washer	Supply Disk	1
126	" -522	"	Flywheel	1
127	" -609	"	Take-up Disk Idler	3
128	" -621	"	Flywheel	1
129	" -827	"	"	1
130	WSB2000N	"	Microswitch	1
131	WSB2600N	"	Motor Base, Motor P.W. Board	3
133	WNS3000N	"	DC Solenoid (Pause Slide Base, Base & Brake)	4
134	REE1500	"E"-washer	Idler Shaft (VKH4144-001)	4
135	REE2000	"	Idler Spring x 2, DC Solenoid Pin x 1, Pinch Roller x 1	4
136	REE2500	"	Slide Base	1
137	REE3000	"	Arm Ass'y, Slide Base	3
138	REE4000	"	Brake Lever	1

Mechanical Component Parts

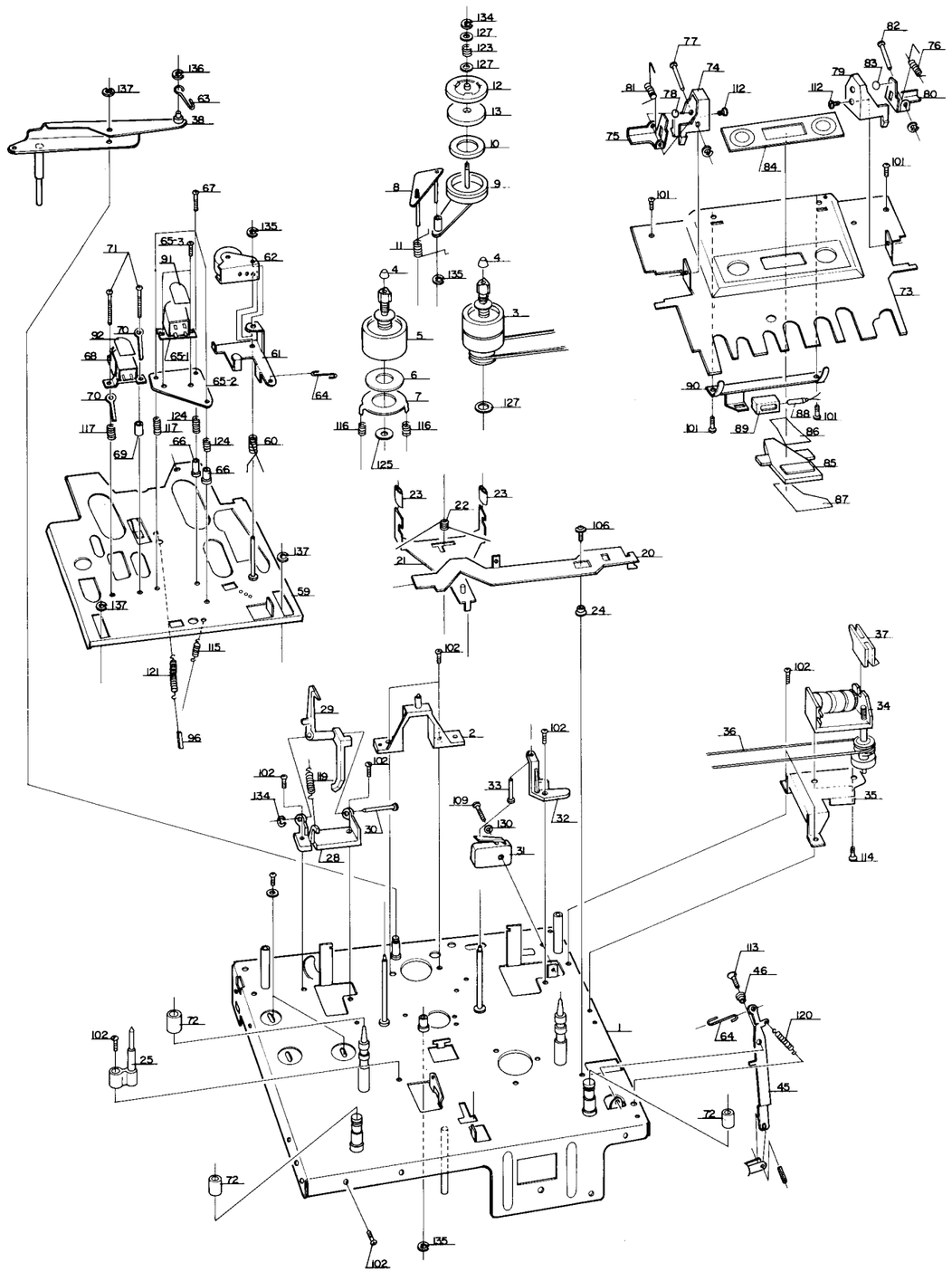

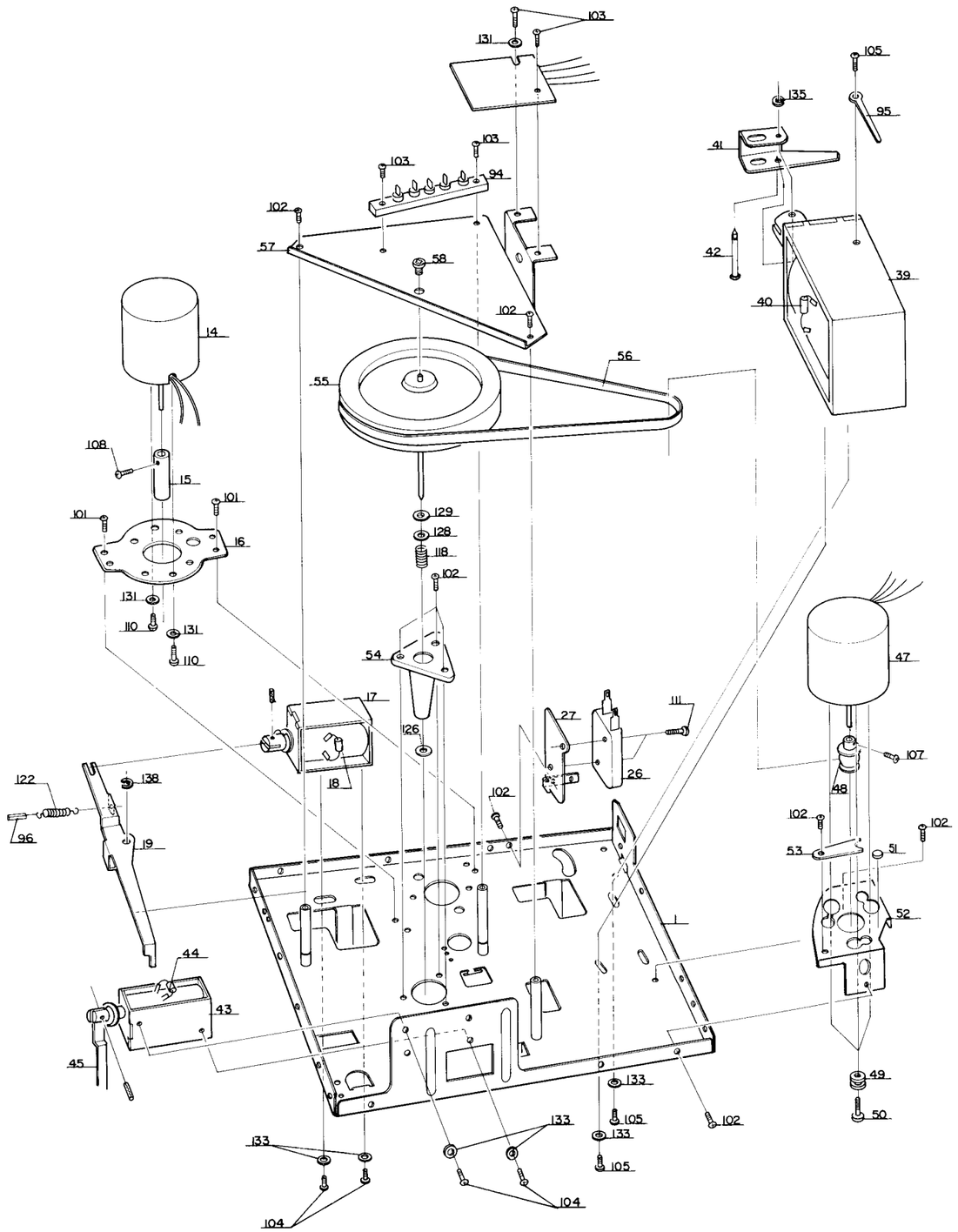

No. 4165

Enclosure Assembly and Electrical Parts

(Except P.W Board parts)

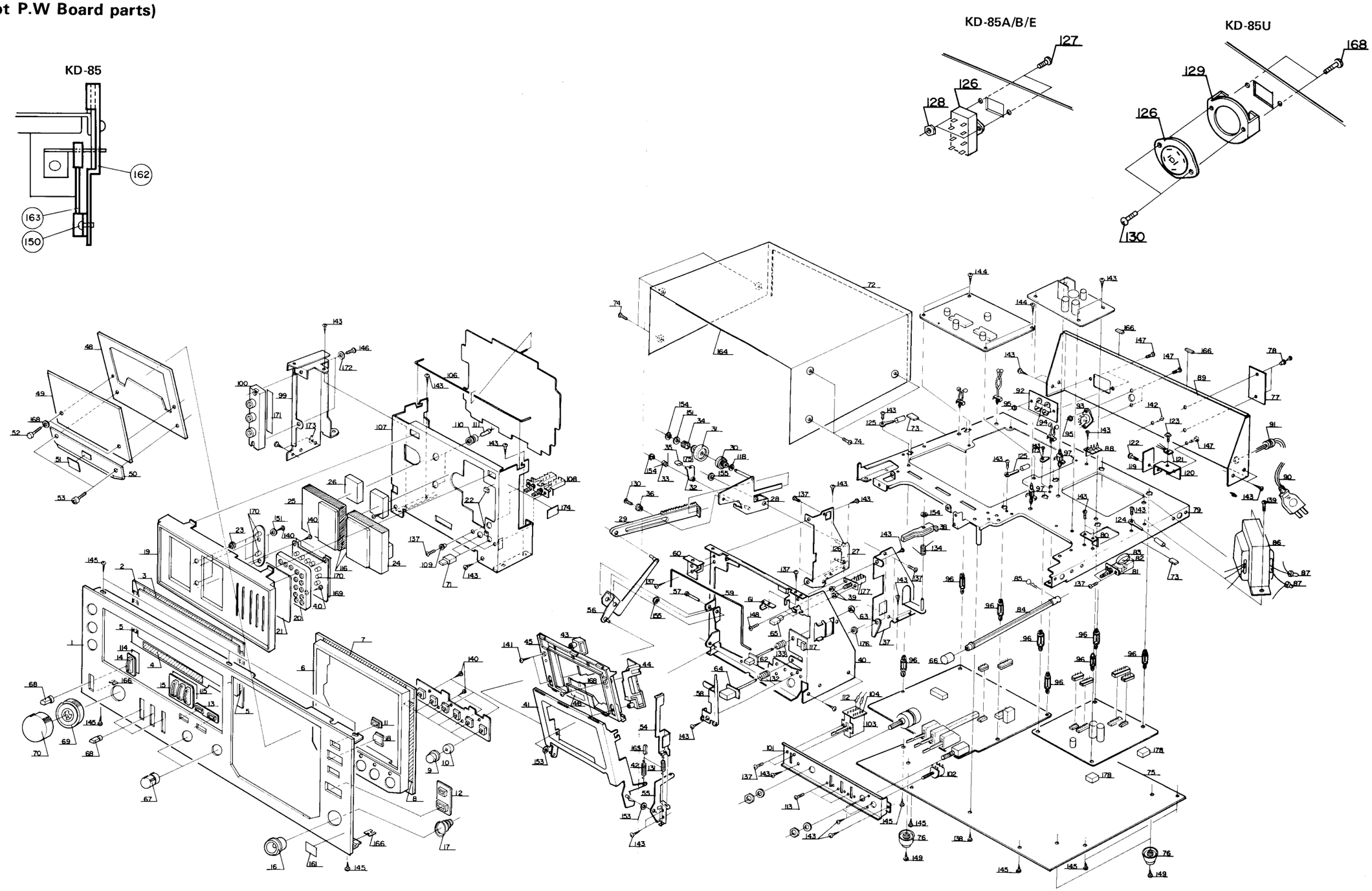

Enclosure Assembly and Electrical Parts List (Except P.W. Board Parts)

⚠ parts are safety assurance parts. When replacing those parts, make sure to use the specified one.

Ref. No.	Parts No.	Parts Name	Remarks	Q'ty
1–5, 11–18, 114, 115	**ZCKD85Y-CBF**	**Front Panel Ass'y**		**1 set**
1	*VJC1021-002	Front Plate		1
2	VJD3110-001	Escutcheon Lens	for Meter	1
3	T43595-017	Double Face	for E.L. (9 x 120)	1
4	" -012	"	" (3.5 x 190)	1
5	" -015	"	" (3.5 x 70)	2
6	VJD2114-001	Escutcheon	for Mecha.	1
7	T43595-014	Double Face	for Mecha. (10 x 135)	2
8	" -015	"	" (3.5 x 70)	2
9	VXP4005-00A	Push Button Ass'y	for Counter	6
10	VKZ4104-001	Button Spacer	"	6
11	VJD4142-001	Button Holder (1)	for Memory	1
12	VJD4143-001	" (2)	for Counter	1
13	VJD4136-001	" (3)	for Timer	1
14	VJD4144-001	Switch Holder (1)	for Input	1
15	VJD4145-001	" (2)	for Tape Selector	1
16	VJD4146-002	" (3)	for Power	1
17	VKW4126-002	Compression Spring	"	1
18	TJE344474-01	Counter Lens		1
19–23	ZCKD85Y-SPIA	Spectro-Peak Indicator Ass'y		1 set
19	VJD2115-002	Spectro-Peak Escutcheon		1
20	VJD4147-001	Spectro-Peak Holder		1
21	VJD4148-001	Spectro-Peak Lens	for Spectro-Peak	1
22	QSP2210-045	Switch	for Memory	1
23	VJD4150-001	Ring	for Spectro-Peak	2
24	VGM0110-002	Meter (R)		1
25	VGM0110-003	" (L)		1
26	TJN000354-34	Cushion	for Meter	2
27	VKL3120-00A	Side Bracket Ass'y (L)	for Mecha.	1
28	VKL4195-00A	Gear Frame Ass'y		1
29	VKS3102-001	Rack Plate		1
30	VKS4108-003	Spur Gear		1
31	VKS4109-004	Brake Drum		1
32	VKS4110-002	Brake Arm		1
33	VKW4106-002	Torsion Spring		1
34	VKW3001-006	Compression Spring		1
35	VKZ4111-001	Rubber Tire		1
36	VKH4123-001	Collar		1
37	VKL3108-00B	Side Bracket Ass'y (R)		1
38	VKS4121-001	Button Lock		1
39	VKH3001-006	Collar	for Memory SW	2
40	VKL2104-002	Front Bracket		1
41, 43–47, 167	ZCKD85Y-CCA	Cassette Holder Ass'y		1 set
41	VKL3121-00B	Holder Bracket Ass'y		1
42	VKW3000-008	Tension Spring	for Holder Bracket	1
43	VKS3103-001	Cassette Holder (L)		1
44	VKS3104-001	" (R)		1
45	VKS2101-001	Holder Cover		1
46	T43595-017	Double Face	(9 x 120)	1
47	T43595-016	"	(12 x 56)	2
48	VJT4004-001	Lid Cover		1
49	VJT4005-001	Lid Plate		1

Ref. No.	Parts No.	Parts Name	Remarks	Q'ty
50	VJT4006-002	Head Cover		1
51	TJL271485-001	S.A. Mark		1
52	VJD4141-001	Screw		2
53	BYS3010RS	Screw Bolt		2
54	VKL4191-00A	Lock Plate Ass'y		1
55	VKL4193-001	Bracket		1
56	VKL4197-00B	Damper Lever Ass'y		1
57	VKH4134-001	Pin	for Damper Lever Ass'y	1
58	VKL4229-00A	Square Plate Ass'y		1
59	VKW4122-001	Eject Rod		1
60	VKL4226-001	Rod Bracket (L)		1
61	VKL4227-001	Rod Bracket (R)		1
62	VXP4006-00A	Button Ass'y	for Reset	1
63	VKH4167-001	Collar		1
64	VXP4007-00A	Eject Button Ass'y		1
65	VXP4008-00A	Button Ass'y	for Memory	1
66	VXP4009-00A	Button Ass'y	for Power	1
67	VXP4010-00A	Knob Ass'y	for REC, EQ Output Level Control	2
68	VXP4011-00A	Select Knob Ass'y		4
69	VXP4012-00A	Volume Knob Ass'y (L)		1
70	VXP4013-00A	Volume Knob Ass'y (R)		1
71	VXP4014-00A	Knob Ass'y	for Timer, Spectro-Peak	2
72	VJC1022-001	Top Cover		1
73	TJN000354-06	Cushion		2
74	E61660-001	Special Screw		6
75	VJC2007-001	Bottom Cover		1
76	VJF3001-001	Foot		4
77	VYN2018-002GA	Name Plate	KD-85B	1
	" -003GA	"	KD-85A	1
	" -004GA	"	KD-85C	1
	" -005GA	"	KD-85E	1
	" -006GA	"	KD-85J	1
	" -007GA	"	KD-85U	1
78	E48729-002	Plastic Rivet	for Name Plate	2
79	VKL1106-00B	Amp. Chassis Ass'y		1
80	VKL4194-001	Switch Bracket	for Power SW	1
81	QSP2111-011	Push Switch	KD-85A/E for Power ⚠	1
	QSP2111-011BS	"	KD-85B " ⚠	1
	QSP1110-222	"	KD-85C/J " ⚠	1
	QSP1110-221	"	KD-85U " ⚠	1
82	QFA72BM-223	M.P. Capacitor	KD-85C 0.022 μF ⚠	1
	QFH72BM-223	M.M. Capacitor	KD-85J " ⚠	1
	QFH53AM-223	"	KD-85U " ⚠	1
83	T47047-001	Capacitor Boot	KD-85J/U ⚠	1
84	VKS4113-001	Remote Bar	for Power SW	1
85	E48981-001	Stopper Pin	for Remote Bar	1
86	TAP344324-01BS	Power Transformer	KD-85B ⚠	1
	TAA344324-01	"	KD-85A/E ⚠	1
	TAP344325-01	"	KD-85C/J ⚠	1
		"	KD-85U ⚠	1
87	TAW000504-01	Wire Connector	KD-85C/J/U	2
88	E46651-001	Wrapping Terminal	for Earth	1
89	*VKL1108-002	Rear Panel	KD-85A/B	1
	" -003	"	KD-85C/J	1
	" -004	"	KD-85U	1

Ref. No.	Parts No.	Parts Name	Remarks	Q'ty
90	QMP2500-200	Power Cord	KD-85A ⚠	1
	QMP9017-007BS	"	KD-85B ⚠	1
	QMP1200-244	"	KD-85C/J ⚠	1
	QMP3900-183	"	KD-85E ⚠	1
	QMP7600-244	"	KD-85U ⚠	1
91	QHS3876-162BS	Strain R. Bushing	KD-85B ⚠	1
	QHS3876-162	"	KD-85A/C/E/J/U ⚠	1
92	TAJ331301-03	PIN Jack Ass'y		1
93	QMC0589-003	DIN Jack Ass'y		1
94	TAA345532-01	Circuit Board	for PIN Jacks	1
95	NTB3000S	Nut	for PIN Jacks	4
96	VYH4005-001	P.C. Support (2)		8
97	TEP344517-01	P.C. Support (1)		2
98	QHW2115-001	Nylon Tie		4
99	VKL3123-00B	Left Bracket Ass'y		1
100	VMJ5003-001	Jack Board Ass'y	(MIC & H.P.)	1
101	VKL3125-001	Control Bracket		1
102	QVD2A2A-024V	V. Resistor	for Output Level Control	1
103	QSL2212-007	Lever Switch	for Input Select SW	1
104	VMW4508-001	P.W. Board		1
105	51739-2	Lug	for Mic and Power	2
106	VKW4121-001	Support Wire	for Spectro-Peak	1
107	VKL2108-001	Meter Bracket		1
108	QSP0229-008	Push Switch Ass'y		1
109	VKH3001-007	Collar		2
110	F6041-001	Bushing	for Meter	2
111	T47861-003	Pilot Lamp	"	2
112	QRD143K-823	C. Resistor	R199, 299 82 kΩ ¼ W	2
113	LPSP3006ZS	Screw	for Switch	2
114	VYTA411-001	Blind (1)	for Input Select SW	1
115	VYTA412-001	Blind (2)	for Tape Select SW	1
116	VYTT401-002	Film	for Meter	2
117	VYSH108-011	Spacer		1
118	Q03093-401	Washer		1
119	VMW4514-001	P.W. Board	for X601	1
120	VKL4264-001	Radiation Plate	"	1
121	2SC1162WTBC	Si. Transistor	"	1
122	LPSP2606Z	Screw		1
123	LPSP3008ZS	"		1
124	VKZ4001-011	Wire Holder		1
125	VKZ4001-007	"		1
126	QSS2325-006BS	Slide Switch	KD-85B for Voltage Select	1
	QSS2325-006	"	KD-85A/E "	1
	QSR0084-001	Voltage Select Switch	KD-85U "	1
127	SDBP3008RS	Screw	KD-85A/B/E for Slide Switch	2
128	NTB300S	Nut	" "	2
129		Bracket	KD-85U for V. select SW	1
130		Screw	" "	2
131	VKW3000-009	Tension Spring	Lock Plate Ass'y	1
132	VKW3001-007	Compression Spring		1
133	" -008	"	Reset	1
134	VKW4114-001	Torsion Spring	Button Lock	1
135	LPSP2604Z	Screw		1
136	LPSP2608Z	"	Brake Arm	1
137	LPSP3006ZS	"	Mecha. x 2, L Bracket x 1, Power SW x 2, Push SW x 2	7

Ref. No.	Parts No.	Parts Name	Remarks	Q'ty
138	LPSP3008ZS	Screw	Bottom Cover x 1, Mecha. x 2	3
139	LPSP4012ZS	"	Power Transformer	2
140	SBSB2606Z	"	Spectro-Peak L Escutcheon x 3	5
141	SBSB2608Z	"	Spectro-Peak L x 2	
142	SBSB3005R	"	Holder Cover x 4, Control x 5	9
143	SBSB3006Z	"	Center	1
			L & R x 8, Bracket (VKL4193) x 2, SC Plate x 1, Lod Bracket (R) x 1, Switch Bracket x 2, Wrapping Terminal x 1, Rear Panel x 4, Left Bracket Ass'y x 3, Meter Bracket x 4, Control Bracket x 3	29
144	SBSB3006V	"	Bracket x 3, Super ANRS P.W. Board x 4	7
145	SBSB3008Z	"	Bottom Cover x 6, Front Plate x 5	11
146	SBSB4010Z	"	Radiation Plate of X601 x 1	2
147	SDBP3008RS	"	PIN Jacks and DIN Jacks x 4	4
148	SPSP2005Z	"	Memory Switch	2
149	SPST3008Z	"	Foot	4
150	DPSP3006ZS	"	Leaf Switch	1
151	WNS2600N	Washer	ANRS P.W. Board x 2, Brake x 1	3
152	WNS3000N	"	Push Switch Ass'y	2
153	Q0093-127	"	t 0.4	2
154	REE2000	E-ring	Brake x 2, Button Lock x 1	3
155	REE3000	"	Brake x 1, Pin x 1	2
156	WNS4000N	Washer	for Mic Jack	2
161	VND4006-002	Caution Label		1
162	VKL4272-001	Switch Bracket		1
163	VSH1103-001	Leaf Switch		1
164	VYSH106-028	Spacer	for Top Cover	1
165	TJN265559-03	Silencer		1
166	TJS344534-01	Spacer	Rear Cover	1
167	VKY4129-001	Cassette Spring	for Holder Cover	1
168	Q03093-607	Washer	for Lid Plate	2
169	VYH4213-001	Insulator	for Spectro-peak	1
170	Y40215-001	Spacer	for ANRS LED x 2, for Spectro-peak LED x 25	27
171	VMW4509-001	P.W. Board	for Jack	1
172	WNS4000N	Washer		2
173	51739-2	Lug	for Left Bracket Ass'y	1
174	VYSP101-014	Spacer		1
175	T47372-002	Clutch Felt	for Gear Frame Ass'y	1
176	VKH4167-001	Collar	for Eject Button	1
177	QSP2210-045	Switch	for Memory	1
178	TJN000354-01	Cushion		3
179	VKZ4001-010	Wire Holder	for Voltage Select Switch	1

Packing

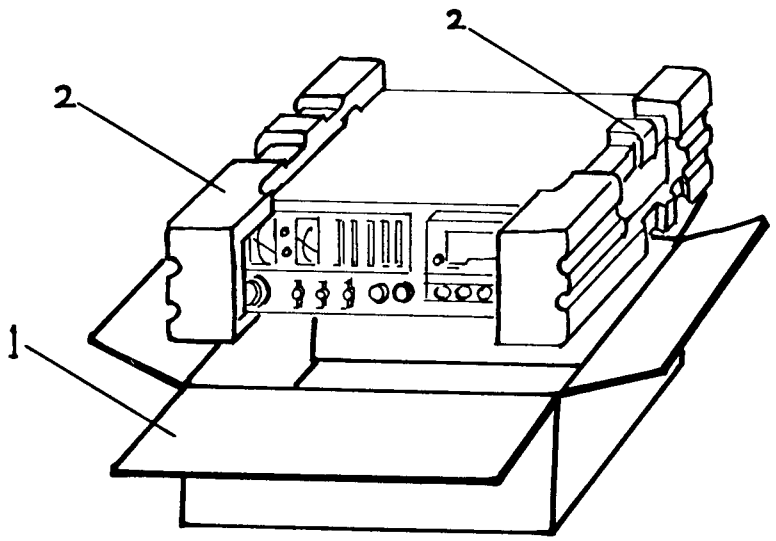

Packing Material Parts List

Ref. No.	Parts No.	Parts Name	Remarks	Q'ty
1–3	*VPA3009-00E	Packing Case Ass'y	KD-85A/B/E/J/U	1 set
	*VPA3009-00I	"	KD-85C	"
1	*VPA3009-008	Case	KD-85A/B/E/J/U	1
	*VPA3009-012	"	KD-85C	1
2	VPH1131-001	Cushion		2
	TKS000501-01	Sheet		1
	TLE000333-03	Envelope	for Deck	1
	AP4056A-036	"	for PIN Cord, Power Cord	2
	QPGB024-03404	"	for Instruction Book	1

Accessories

Accessories

Parts No.	Parts Name	Remarks	Q'ty
VMP0002-00A	PIN Cord Ass'y	KD-85A/C/J/U	2
CN-201	DIN Cord	KD-85B/E	1
T47796-00B	Head Cleaning Stick		2
TLT000429-01	Caution Card		1
AP4056-024	Envelope	for H.C. Stick	1
T46965-002	Demo. Tape		1
TLJ000477-02	Super ANRS Seal		1
TLJ000476-02	ANRS Seal		1
VNN0014-301	Instruction Book		1
TLT052401-01	Warranty Label	KD-85A/E Disconnect	1
TLT052401-01BS	"	KD-85B "	1
TJL000443-01	Seal	Made in Japan KD-85B	1
QZL1002-003BS	Warning Label	KD-85B P. Cord	1
T46328-001	Caution Label	KD-85U	1
T46328-003	"	KD-85B	1
T46328-004	"	KD-85E	1
BT20013B	Guarantee Certificate	KD-85B	1
BT20032	Warranty Card	KD-85J/U	1
BT20023	Service Procedure	KD-85J/U	1
BT20024B	Special Reply Card	KD-85J	1
BT20025B	Warranty Card	KD-85C	1
BT20029	"	KD-85A	1
TLT000505-01	UL/CSA Caution Label	KD-85C/J (Side Bottom)	2
TLT279401-01	Caution Card	KD-85E	1
E7795-1	E. P. Mark	KD-85U for PX	1
E04056-001	Conti. Plug	KD-85U for Sansei	1
T44362-001	CSA Marker	KD-85C	1